PLOT DATE: Tuesday, 19 March 2024 - 12:23 PM
PLOT NAME: L:\Jobs\2023\L23108 99 Courtney Drive, Upper Coomera_OPW VL_OPW VL\WORKING\DRAWINGS\L23108_OPW STG 02.dwg | PLOTTED BY: 312

PLEASE PRINT IN COLOUR

C M Y K

FOR APPROVAL

# OPW.

## CALLI | SUBDIVISION: STAGE 02

### 79-99 COURTNEY DRIVE, UPPER COOMERA, QLD.

LOT 188-192 ON RP173728

PROJECT REFERENCE - L23108


**SHEET SET**

| | | |
|---|---|---|
| L23108 - 100 | | TITLE PAGE & SHEET SET |
| L23108 - 101 | | LEGENDS, DATA REGISTRY & PLANT SCHEDULE |

**LANDSCAPE PLANS**

| | | |
|---|---|---|
| L23108 - 200 | | STAGING & EXTENT OF WORKS |
| L23108 - 201 | | FENCING PLAN |
| L23108 - 202 | | TREATMENT AREAS |
| L23108 - 203 | | STREET TREE PLAN - ZONE 01 |
| L23108 - 204 | | STREET TREE PLAN - ZONE 02 |
| L23108 - 205 | | BIO-RETENTION BASIN B SOUTH |
| L23108 - 206 | | BIO-RETENTION BASIN B NORTH |

**DETAILS & SECTIONS**

| | | |
|---|---|---|
| L23108 - 300 | | DETAIL DRAWINGS 01 |
| L23108 - 301 | | DETAIL DRAWINGS 02 |
| L23108 - 302 | | LANDSCAPE SECTIONS |

**SPECIFICATIONS**

| | | |
|---|---|---|
| L23108 - 400 | | LANDSCAPE SPECIFICATIONS |


**WARNING!!!**
**BEWARE OF UNDERGROUND SERVICES**

NOTE THAT LOCATION SHOWN OF EXISTING UNDERGROUND SERVICES IS INDICATIVE ONLY AND MAY NOT BE ACCURATE AT THE TIME OF LANDSCAPE WORKS. NO GUARANTEE IS GIVEN THAT ALL EXISTING SERVICES ARE SHOWN.

DETERMINATION OF THE EXACT POSITION AND EXTENT OF UNDERGROUND SERVICES IS THE RESPONSIBILITY OF THE CONTRACTOR AND IS TO BE CONFIRMED ON SITE PRIOR TO COMMENCEMENT OF WORK.

**GENERAL NOTES**

1. BEFORE COMMENCEMENT OF WORKS IT IS THE RESPONSIBILITY OF THE LANDSCAPE CONTRACTOR TO CONTACT DIAL BEFORE YOU DIG (PH. 1100 OR WEB 1100.COM.AU) FOR INFORMATION ON SERVICES IN THE AREA SHOWN ON THE PLAN.
2. THE CONTRACTOR SHALL VERIFY THE LOCATION AND DEPTH OF ALL SERVICES PRIOR TO COMMENCING ON SITE.
3. THE CONTRACTOR SHALL BE LIABLE FOR ANY DAMAGE TO SERVICES DURING LANDSCAPE WORKS.
4. THE CONTRACTOR SHALL VERIFY THE LOCATION OF ANY EXISTING TREES SHOWN TO BE RETAINED AND PROTECT THEM DURING WORKS.
5. ALL TREES SHALL BE PLANTED IN LOCATIONS SHOWN ON THE PLAN.
6. ANY CHANGE TO PLANT SPECIES MUST HAVE THE APPROVAL OF THE LANDSCAPE ARCHITECT.
7. TREES SHALL BE PLANTED NO LESS THAN THE FOLLOWING DISTANCES FROM LANDSCAPE ELEMENTS (TO BE CONFIRMED AT TREE HOLE INSPECTION)
   - 1M FROM STORMWATER OUTLET
   - 1M FROM EDGE OF GULLY PIT
   - 1M MINIMUM PLANTING WIDTH BETWEEN KERB AND PATHWAY
   - 1M FROM CENTRE OF TREE TO FRONT FACE OF KERB AND CHANNEL
   - 1M FROM OVERHEAD SERVICE WIRES
   - 2M FROM FRONT OR REAR OF STREETSIGNS
   - 3M FROM DRIVEWAYS
   - 3M FROM FIRE HYDRANTS
   - 3.5 M FROM GROUND MOUNTED TRANSFORMERS
   - 6M FROM EXISTING TREES
   - 6M FROM DEPARTURE SIDE OF BUS STOPS AND PED CROSSINGS
   - 7M FROM POWER POLES/ LIGHT POLES
   - 8M MINIMUM SPACING BETWEEN NEW TREES
   - 15M FROM APPROACH SIDE OF BUS STOPS AND PEDESTRIAN CROSSINGS
   - 15M FROM DEPARTURE SIDE OF A STREET INTERSECTION
   - 20M FROM APPROACH SIDE OF A STREET INTERSECTION
8. CONSTRUCTION CERTIFICATION FOR ALL STRUCTURAL ELEMENTS IS TO BE PROVIDED PRIOR TO PRACTICAL COMPLETION BEING GRANTED.

**PROJECT TITLE**
**CALLI | SUBDIVISION: STAGE 02**
OPERATIONAL WORKS: LANDSCAPE
**DRAWING TITLE**
TITLE PAGE & SHEET LIST

| REV | DESCRIPTION | DATE | DRAWN | DESIGN | CHECK | APP |
|---|---|---|---|---|---|---|
| B | FOR APPROVAL | 28.08.2024 | MB | MB | MB | JB |
| A | PRELIMINARY ISSUE | 28.08.2024 | SS | MB | MB | JB |

**ISSUE:** FOR APPROVAL
**CLIENT:** HB LAND PTY LTD
**BASE PROVIDED BY:** MORTONS URBAN SOLUTIONS
**MANAGER:** JON BROOKSBY


COPYRIGHT Zone Landscape 2018. This document and the information are solely for the use of the authorised recipient and this document may not be used, copied or reproduced in whole or part for any purpose other than that for which it was supplied by Zone Landscape 2018. Zone Landscape makes no representation, undertakes no duty and accepts no responsibility to any third party who may use or rely upon this document or the information.



zone Landscape Architecture

**ZONE LANDSCAPE ARCHITECTURE**

**GOLD COAST**
1638 Tweed Street, Burleigh Heads QLD 4220
PO Box 3805, Burleigh Town QLD 4220

**GLADSTONE**
2/172 Goondoon St, Gladstone, QLD 4680
PO Box 5332, Gladstone QLD 4680

zonelandscape.com.au | 07 55622303


**JOB / DRAWING NO:** L23108 - 100

**SHEET NO.** 01 OF 12

FILENAME: L:\Jobs\2022\L23108 99 Courtney Drive, Upper Coomera_OPW\2.OPW\5. WORKING\DRAWINGS\L CAD\L23108_OPW_STG 02.dwg | PLOTTED: 9/2/2024
12:23 PM

## LEGEND - SITE DETAILS

**SITE BOUNDARY**
DEVELOPMENT SITE LOCATED ON LOT 188-192 ON RP173728

**FUTURE STAGE BOUNDARIES**
FUTURE DEVELOPMENT STAGING. APPROVAL NOT SORT FOR WITHIN CURRENT APPLICATION.

**EXTENT OF WORKS**
DEVELOPMENT SITE LOCATED ON LOT 188-192 ON RP173728.

## LEGEND - LANDSCAPE TREATMENTS

(T) **TURF:** REINSTATED/VERGE
TURF RECTIFICATION TO VERGE TO LOCAL COUNCIL SPECIFICATIONS.
INSTALLATION OF 75MM SOIL DEPTH.
REFER DETAILS DRAWINGS FOR FURTHER INFO.
**TOTAL TURF AREA:** 2971.85M²
**TOTAL RECTIFICATION EXTERNAL TURF:** 3292.95M²

(B1) **BIO BASIN:** BASE PLANTING
REFER BIO BASIN PLANS.
REFER CIVIL/STORMWATER PLAN FOR FURTHER INFO.
**BIO BASIN 'B' PLANTING AREA:** 576.60M²

(B2) **BIO BASIN:** BATTER PLANTING
REFER BIO BASIN PLANS.
REFER CIVIL/STORMWATER PLAN FOR FURTHER INFO.
**BIO BASIN 'B' PLANTING AREA:** 7287.05M²

(B3) **BIO BASIN:** RIBBON PLANTING
REFER BIO BASIN PLANS.
REFER CIVIL/STORMWATER PLAN FOR FURTHER INFO.
**BIO BASIN 'B' PLANTING AREA:** 677.45M²

## LEGEND - FENCING PLAN

(F1) **FENCE TYPE 01:** EXISTING FENCE
RETAIN EXISTING FENCE TO NEIGHBOURING PROPERTIES.
RECTIFY ANY DAMAGE INCURRED DURING CONSTRUCTION.

(F2) **FENCE TYPE 02:** POS INTERFACE
BLACK POWDER COATED ALUMINUM SAFETY FENCE @ 1200MM HIGH.
REFER DETAIL DRAWINGS.
TOTAL LENGTH: 14.80LM

(F3) **FENCE TYPE 03:** BOLLARD LINE
TIMBER BOLLARDS @ 1500MM CENTERS. REFER DETAIL DRAWINGS.
COMPLETED UNDER BUILDERS SCOPE.
**TOTAL LENGTH:** 95.60LM
**TOTAL QTY:** 55

(W1) **WALL TYPE 01:** RETAINING WALLS
CONCRETE SLEEPER RETAINING WALLS
REFER TO CIVIL PACKAGE FOR FURTHER DETAILS

(AG) **ACCESS GATE**
MAINTENANCE ACCESS GATE. REFER DETAIL DRAWINGS.
**TOTAL QTY:** 01

## REFERENCE DATA REGISTER | CURRENT REVISION

| CONSULTANT | REVISION | DOCUMENT TITLE (INCL. FILE TYPE) | DATE RECEIVED | PROVIDED BY |
|---|---|---|---|---|
| ARCHITECTUAL | - | - | - | - |
| CIVIL | C | OPERATIONAL WORKS: STAGE 01 - 41901-01 | 25.08.23 | MORTONS URBAN SOLUTIONS |
| ELECTRICAL | B | STAGE 01 COURTNEY DRIVE - F019-01 | 08.11.23 | ROBIN RUSSELL & ASSOC |
| SURVEY | - | - | - | - |

## STREET TREE SCHEDULE: STAGE 02

**TOTAL TREES:** 49

**STREET TREES**

| TREET TYPE | CODE | SPECIES | COMMON NAME | SIZE | DENSITY | QTY |
|---|---|---|---|---|---|---|
| TREE TYPE 01 | FLibra | FLINDERSIA brayleyana | Queensland Maple | 100LTR | | 13 |
| TREE TYPE 02 | TRIlau | TRISTANIOPSIS laurina | Water Gum | 100LTR | AS SHOWN | 17 |
| TREE TYPE 03 | CUPana | CUPANIOPSIS anacardioides | Tuckeroo | 100LTR | | 19 |

NOTE TABLE REPRESENTS TOTAL STREET TREE QTY'S THIS STAGE.

## BIO BASIN 'B': BASE PLANTING (B1)

**TOTAL AREA: 576.60M²**

**GROUNDCOVERS**

| CODE | SPECIES | COMMON NAME | SIZE | DENSITY | QTY |
|---|---|---|---|---|---|
| CARapp | CAREX appressa | Tall Sedge | 75mm | | |
| FINnod | FINICIA nodosa | Knobby Club Rush | 75mm | | |
| IMPcyl | IMPERATA cylindrica | Cogon Grass | 75mm | 6PM² | 3462 |
| LOMhys | LOMANDRA hystrix | Creek Matt Rush | 75mm | | |
| LOMlon | LOMANDRA longifolia | Long Leaved Mat Rush | 75mm | | |
| THEaus | THEMEDA australis | Kangaroo Grass | 75mm | | |

## BIO BASIN 'B': BATTER PLANTING (B2)

**TOTAL AREA: 7287.05M²**

**TREES**

| CODE | SPECIES | COMMON NAME | SIZE | DENSITY | QTY |
|---|---|---|---|---|---|
| CALvim | CALLISTEMON viminalis | Weeping Bottlebrush | 75mm | | |
| EUCobo | EUCALYPTUS obovatus | Hard Quandong | 75mm | | |
| LOPcon | LOPHOSTEMON confertus | Brush Box | 75mm | | |
| LOPsua | LOPHOSTEMON suavolens | Swamp Mahogany | 75mm | 1/10M² | 729 |
| MELnod | MELALEUCA nodosa | Prickly-Leaf Paperbark | 75mm | | |
| MELqui | MELALEUCA quinquenerva | Cajuput Paperbark | 75mm | | |
| MELsie | MELALEUCA sieberi | Small-Leaved Paperbark | 75mm | | |

**SHRUBS**

| CODE | SPECIES | COMMON NAME | SIZE | DENSITY | QTY |
|---|---|---|---|---|---|
| BREobl | BREYNIA oblongifolia | Coffee Bush | 75mm | | |
| CALsie | CALLISTEMON sieberi | River Bottlebrush | 75mm | | |
| HARvio | HARDENBERGIA violacea | Purple Coral Pea | 75mm | 4/10M² | 2915 |
| LEPpol | LEPTOSPERMUM polygalifolium | Wild May | 75mm | | |
| LOMsil | LOMATIA silaifolia | Feather Leaved Crinklebush | 75mm | | |

**GROUNDCOVERS**

| CODE | SPECIES | COMMON NAME | SIZE | DENSITY | QTY |
|---|---|---|---|---|---|
| CARapp | CAREX appressa | Tall Sedge | 75mm | | |
| FINnod | FINICIA nodosa | Knobby Club Rush | 75mm | | |
| IMPcyl | IMPERATA cylindrica | Cogon Grass | 75mm | | |
| LOMhys | LOMANDRA hystrix | Creek Matt Rush | 75mm | 4PM² | 29148 |
| LOMlon | LOMANDRA longifolia | Long Leaved Mat Rush | 75mm | | |
| MYOpar | MYOPORUM parvifolium | Creeping Boobialla | 75mm | | |
| THEaus | THEMEDA australis | Kangaroo Grass | 75mm | | |

## BIO BASIN 'B': RIBBON PLANTING (B3)

**TOTAL AREA: 677.45M²**

**GROUNDCOVERS**

| CODE | SPECIES | COMMON NAME | SIZE | DENSITY | QTY |
|---|---|---|---|---|---|
| LOMhys | LOMANDRA hystrix | Creek Matt Rush | 75mm | 2PM² | 1354 |
| LOMlon | FINICIA nodosa | Knobby Club Rush | 75mm | | |

(T01) **DATA SET 01** - PLANTING SCHEDULE
REFER ALSO SPECIFICATIONS FOR FURTHER DETAILS

**PROJECT TITLE**
**CALLI |** SUBDIVISION: STAGE 02
OPERATIONAL WORKS: LANDSCAPE
**DRAWING TITLE**
LEGENDS, DATA REGISTRY & PLANT SCHEDULE

| REV | DESCRIPTION | DATE | DRAWN | DESIGN | CHECK | APP |
|---|---|---|---|---|---|---|
| B | FOR APPROVAL | 28.08.2024 | MB | MB | MB | JB |
| A | PRELIMINARY ISSUE | 28.08.2024 | SS | MB | MB | JB |

**ISSUE:** FOR APPROVAL
**CLIENT:** HB LAND PTY LTD
**BASE PROVIDED BY:** MORTONS URBAN SOLUTIONS
**MANAGER:** JON BROOKSBY

COPYRIGHT Zone Landscape 2018. This document and the information are solely for the use of the authorised recipient and this document may not be used, copied or reproduced in whole or part for any purpose other than that for which it was supplied by Zone Landscape 2018. Zone Landscape makes no representation, undertakes no duty and accepts no responsibility to any third party who may use or rely upon this document or the information.

zone Landscape Architecture

**ZONE LANDSCAPE ARCHITECTURE**

**GOLD COAST**
1638 Tweed Street, Burleigh Heads QLD 4220
PO Box 3805, Burleigh Town QLD 4220

**GLADSTONE**
2/172 Goondoon St, Gladstone, QLD 4680
PO Box 5332, Gladstone QLD 4680

zonelandscape.com.au | 07 55622303

**JOB / DRAWING NO:** L23108 - 101

**SHEET NO.** 02 OF 12

PROJECT TITLE

**CALLI | SUBDIVISION: STAGE 02**

OPERATIONAL WORKS: LANDSCAPE

DRAWING TITLE

STAGING & EXTENT OF WORKS

| REV | DESCRIPTION | DATE | DRAWN | DESIGN | CHECK | APP |
|---|---|---|---|---|---|---|
| B | FOR APPROVAL | 28.08.2024 | MB | MB | MB | JB |
| A | PRELIMINARY ISSUE | 28.08.2024 | SS | MB | MB | JB |

ISSUE: FOR APPROVAL

CLIENT: HB LAND PTY LTD

BASE PROVIDED BY: MORTONS URBAN SOLUTIONS

MANAGER: JON BROOKSBY

COPYRIGHT Zone Landscape 2018. This document and the information are solely for the use of the authorised recipient and this document may not be used, copied or reproduced in whole or part for any purpose other than that for which it was supplied by Zone Landscape 2018. Zone Landscape makes no representation, undertakes no duty and accepts no responsibility to any third party who may use or rely upon this document or the information.

zone Landscape Architecture

ZONE LANDSCAPE ARCHITECTURE

GOLD COAST
1638 Tweed Street, Burleigh Heads QLD 4220
PO Box 3805, Burleigh Town QLD 4220

GLADSTONE
2/172 Goondoon St, Gladstone, QLD 4680
PO Box 5332, Gladstone QLD 4680

zonelandscape.com.au | 07 55622303

JOB / DRAWING NO: L23108 - 200

SHEET NO. 03 OF 12

**PROJECT TITLE**

**CALLI |** SUBDIVISION: STAGE 02

OPERATIONAL WORKS: LANDSCAPE

**DRAWING TITLE**

FENCING PLAN

| REV | DESCRIPTION | DATE | DRAWN | DESIGN | CHECK | APP |
|---|---|---|---|---|---|---|
| B | FOR APPROVAL | 28.08.2024 | MB | MB | MB | JB |
| A | PRELIMINARY ISSUE | 28.08.2024 | SS | MB | MB | JB |

**ISSUE:** FOR APPROVAL

**CLIENT:** HB LAND PTY LTD

**BASE PROVIDED BY:** MORTONS URBAN SOLUTIONS

**MANAGER:** JON BROOKSBY

COPYRIGHT Zone Landscape 2018. This document and the information are solely for the use of the authorised recipient and this document may not be used, copied or reproduced in whole or part for any purpose other than that for which it was supplied by Zone Landscape 2018. Zone Landscape makes no representation, undertakes no duty and accepts no responsibility to any third party who may use or rely upon this document or the information.

zone Landscape Architecture

**ZONE LANDSCAPE ARCHITECTURE**

**GOLD COAST**
16-38 Tweed Street, Burleigh Heads QLD 4220
PO Box 3805, Burleigh Town QLD 4220

**GLADSTONE**
2/172 Goondoon St, Gladstone, QLD 4680
PO Box 5332, Gladstone QLD 4680

zonelandscape.com.au | 07 55622303

**JOB / DRAWING NO:** L23108 - 201

**SHEET NO.** 04 OF 12

PLS EX-MP L:\Jobs\2023\L23108 99 Courtney Drive, Upper Coomera_OPWS_OPWS_WORKING\DRAWINGS\L(CAD)\L23108_OPWS STG 02.dwg [TK-OTTB3] 9/02/2024 12:28 PM

**PROJECT TITLE**

**CALLI |** SUBDIVISION: STAGE 02

OPERATIONAL WORKS: LANDSCAPE

**DRAWING TITLE**

TREATMENT AREAS

| REV | DESCRIPTION | DATE | DRAWN | DESIGN | CHECK | APP |
|---|---|---|---|---|---|---|
| B | FOR APPROVAL | 28.08.2024 | MB | MB | MB | JB |
| A | PRELIMINARY ISSUE | 28.08.2024 | SS | MB | MB | JB |

**ISSUE:** FOR APPROVAL

**CLIENT:** HB LAND PTY LTD

**BASE PROVIDED BY:** MORTONS URBAN SOLUTIONS

**MANAGER:** JON BROOKSBY

COPYRIGHT Zone Landscape 2018. This document and the information are solely for the use of the authorised recipient and this document may not be used, copied or reproduced in whole or part for any purpose other than that for which it was supplied by Zone Landscape 2018. Zone Landscape makes no representation, undertakes no duty and accepts no responsibility to any third party who may use or rely upon this document or the information.

zone Landscape Architecture

**ZONE LANDSCAPE ARCHITECTURE**

**GOLD COAST**
16-38 Tweed Street, Burleigh Heads QLD 4220
PO Box 3805, Burleigh Town QLD 4220

**GLADSTONE**
2/172 Goondoon St, Gladstone, QLD 4680
PO Box 5332, Gladstone QLD 4680

zonelandscape.com.au | 07 55622303

**JOB / DRAWING NO:** L23108 - 202

**SHEET NO.** 05 OF 12

PLOTTED BY: Jon Brooksby 2024-09-02 12:24 PM
C:\Users\jon\AppData\Local\Temp\acpublish\22108\L23108 - CALLI - Stage 2 - Operational Works - Landscape - R24.dwg

## STREET TREE SCHEDULE: STAGE 02

**TOTAL TREES:** 49

| STREET TREES | | | | | | |
|---|---|---|---|---|---|---|
| **TREET TYPE** | **CODE** | **SPECIES** | **COMMON NAME** | **SIZE** | **DENSITY** | **QTY** |
| TREE TYPE 01 | FLibra | FLINDERSIA brayleyana | Queensland Maple | 100LTR | | 13 |
| TREE TYPE 02 | TRIlau | TRISTANIOPSIS laurina | Water Gum | 100LTR | AS SHOWN | 17 |
| TREE TYPE 03 | CUPana | CUPANIOPSIS anacardioides | Tuckeroo | 100LTR | | 19 |

NOTE: TABLE REPRESENTS TOTAL STREET TREE QTY'S THIS STAGE.

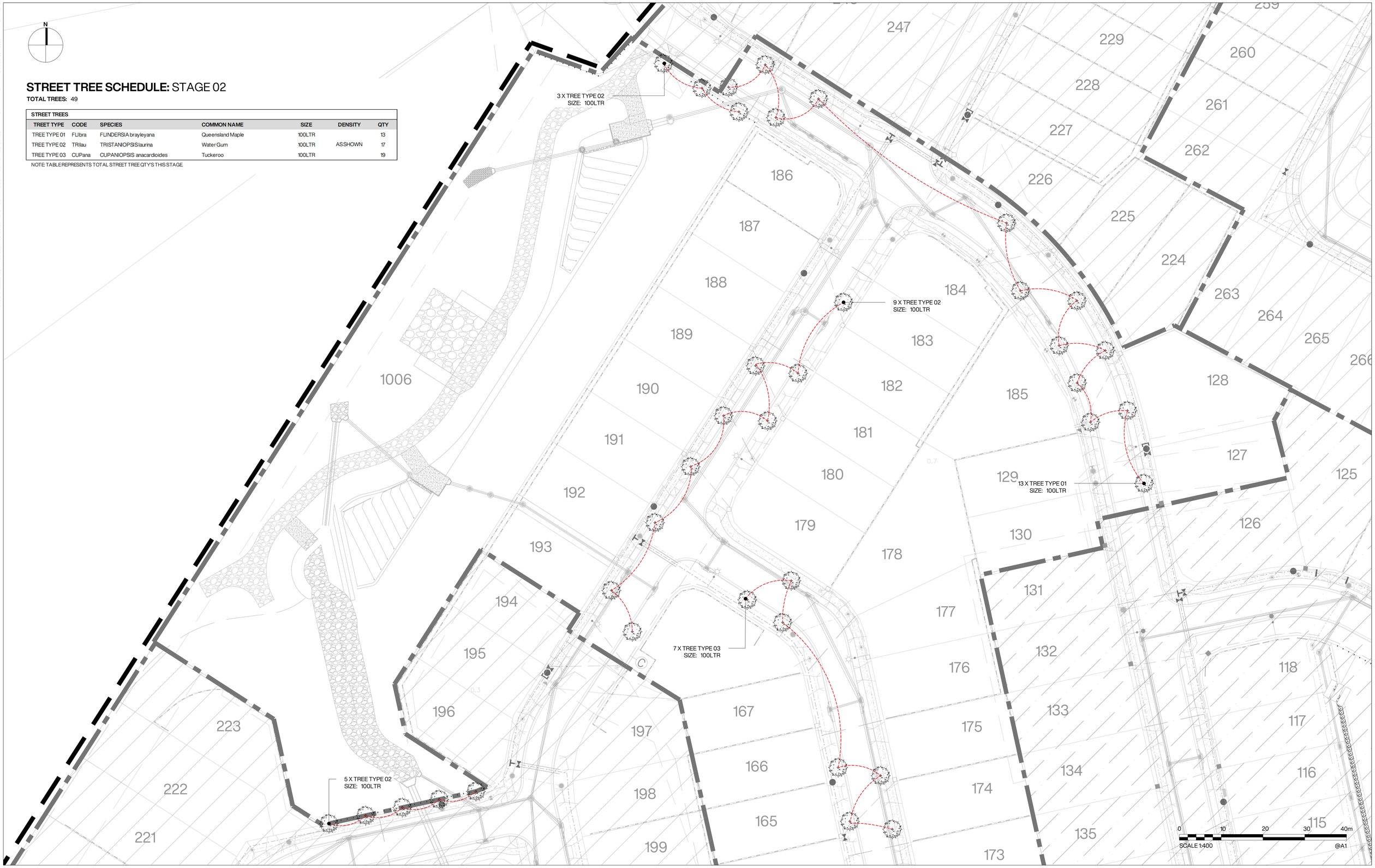


SCALE 1:400 @A1

0 10 20 30 40m

**PROJECT TITLE**

**CALLI |** SUBDIVISION: STAGE 02

OPERATIONAL WORKS: LANDSCAPE

**DRAWING TITLE**

PLANTING PLAN -ZONE 01

| REV | DESCRIPTION | DATE | DRAWN | DESIGN | CHECK | APP |
|---|---|---|---|---|---|---|
| B | FOR APPROVAL | 28.08.2024 | MB | MB | MB | JB |
| A | PRELIMINARY ISSUE | 28.08.2024 | SS | MB | MB | JB |

**ISSUE:** FOR APPROVAL

**CLIENT:** HB LAND PTY LTD

**BASE PROVIDED BY:** MORTONS URBAN SOLUTIONS

**MANAGER:** JON BROOKSBY

COPYRIGHT Zone Landscape 2018. This document and the information are solely for the use of the authorised recipient and this document may not be used, copied or reproduced in whole or part for any purpose other than that for which it was supplied by Zone Landscape 2018. Zone Landscape makes no representation, undertakes no duty and accepts no responsibility to any third party who may use or rely upon this document or the information.

zone Landscape Architecture

**ZONE LANDSCAPE ARCHITECTURE**

**GOLD COAST**
1638 Tweed Street, Burleigh Heads QLD 4220
PO Box 3805, Burleigh Town QLD 4220

**GLADSTONE**
2/172 Goondoon St, Gladstone, QLD 4680
PO Box 5332, Gladstone QLD 4680

zonelandscape.com.au | 07 55622303

**JOB / DRAWING NO:** L23108 - 203

**SHEET NO.** 06 OF 12

PLOTTED BY: Jon Brooksby 9/02/2024 12:28 PM

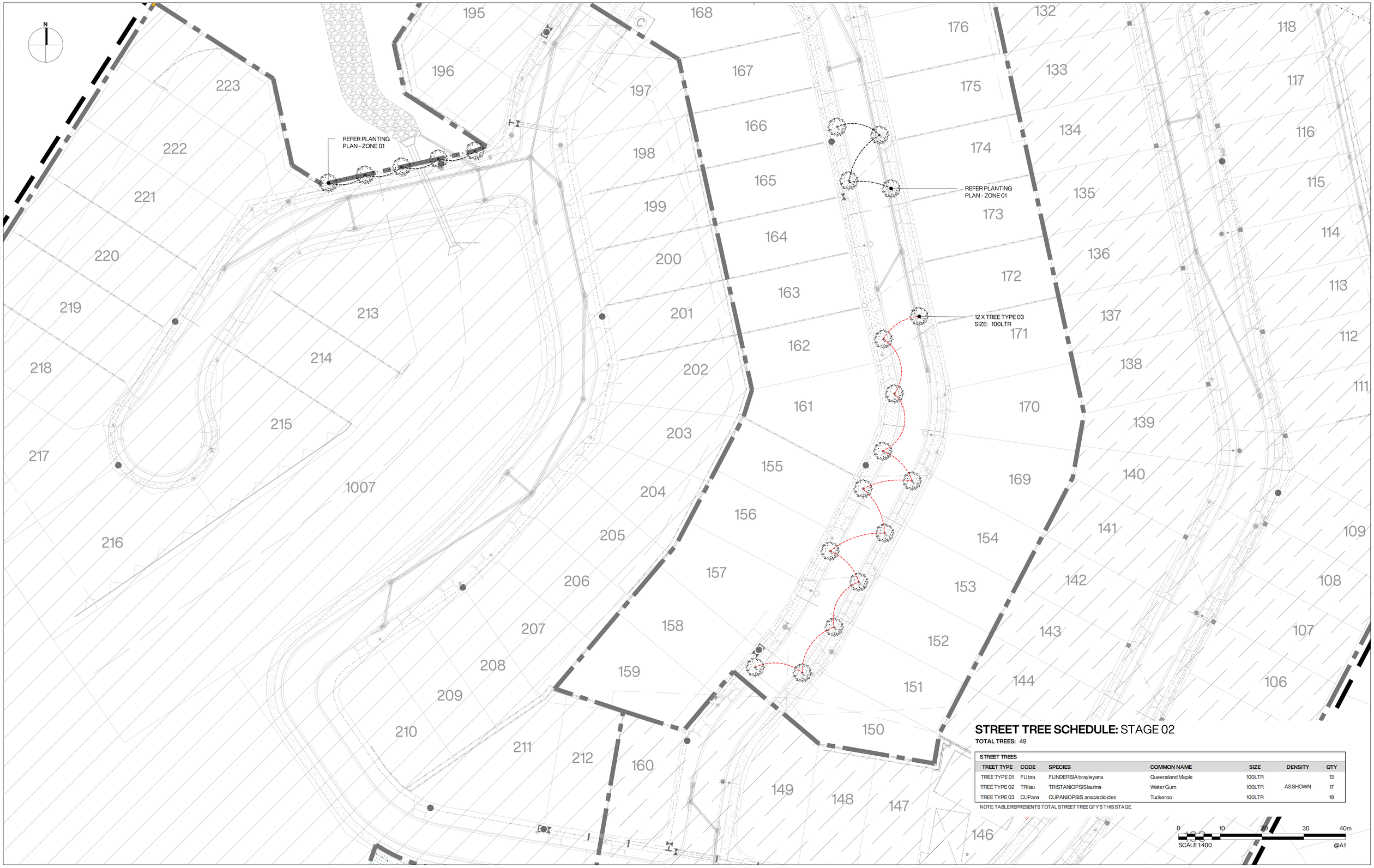


## STREET TREE SCHEDULE: STAGE 02

**TOTAL TREES:** 49

| STREET TREES | | | | | | |
|---|---|---|---|---|---|---|
| **TREET TYPE** | **CODE** | **SPECIES** | **COMMON NAME** | **SIZE** | **DENSITY** | **QTY** |
| TREE TYPE 01 | FLibra | FLINDERSIA brayleyana | Queensland Maple | 100LTR | | 13 |
| TREE TYPE 02 | TRilau | TRISTANIOPSIS laurina | Water Gum | 100LTR | AS SHOWN | 17 |
| TREE TYPE 03 | CUPana | CUPANIOPSIS anacardioides | Tuckeroo | 100LTR | | 19 |

NOTE: TABLE REPRESENTS TOTAL STREET TREE QTY'S THIS STAGE.

**PROJECT TITLE**

**CALLI |** SUBDIVISION: STAGE 02

OPERATIONAL WORKS: LANDSCAPE

**DRAWING TITLE**

PLANTING PLAN - ZONE 02

| REV | DESCRIPTION | DATE | DRAWN | DESIGN | CHECK | APP |
|---|---|---|---|---|---|---|
| B | FOR APPROVAL | 28.08.2024 | MB | MB | MB | JB |
| A | PRELIMINARY ISSUE | 28.08.2024 | SS | MB | MB | JB |

**ISSUE:** FOR APPROVAL

**CLIENT:** HB LAND PTY LTD

**BASE PROVIDED BY:** MORTONS URBAN SOLUTIONS

**MANAGER:** JON BROOKSBY

COPYRIGHT Zone Landscape 2018. This document and the information are solely for the use of the authorised recipient and this document may not be used, copied or reproduced in whole or part for any purpose other than that for which it was supplied by Zone Landscape 2018. Zone Landscape makes no representation, undertakes no duty and accepts no responsibility to any third party who may use or rely upon this document or the information.

zone Landscape Architecture

**ZONE LANDSCAPE ARCHITECTURE**

**GOLD COAST**
1638 Tweed Street, Burleigh Heads QLD 4220
PO Box 3805, Burleigh Town QLD 4220

**GLADSTONE**
2/172 Goondoon St, Gladstone, QLD 4680
PO Box 5332, Gladstone QLD 4680

zonelandscape.com.au | 07 55622303

**JOB / DRAWING NO:** L23108 - 204

**SHEET NO.** 07 OF 12

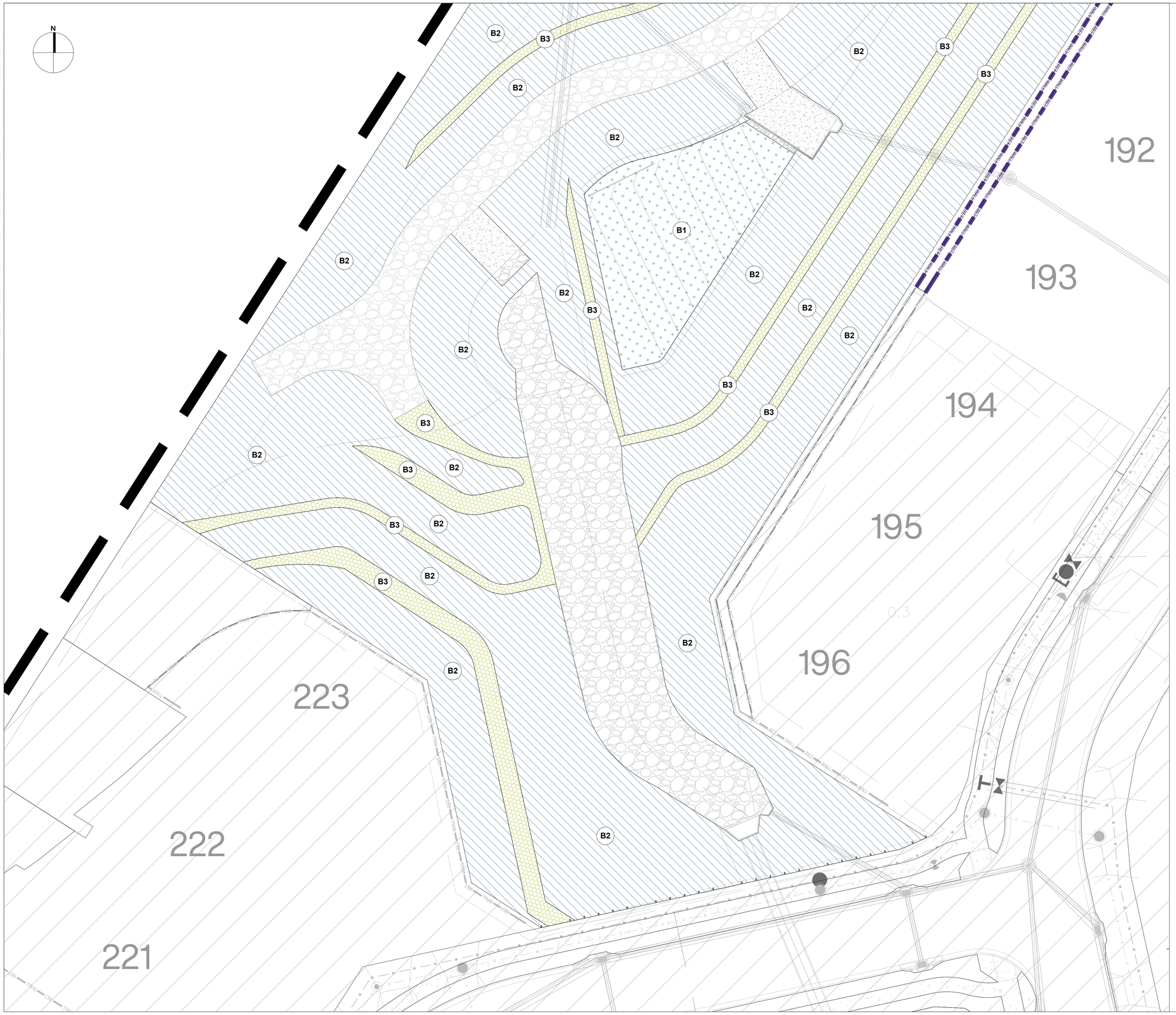


## BIO BASIN 'B': BASE PLANTING (B1)

**TOTAL AREA: 576.60M²**

| GROUNDCOVERS | | | | | |
|---|---|---|---|---|---|
| CODE | SPECIES | COMMON NAME | SIZE | DENSITY | QTY |
| CARapp | CAREX appressa | Tall Sedge | 75mm | 6PM² | 3462 |
| FINnod | FINICIA nodosa | Knobby Club Rush | 75mm | | |
| IMPcyl | IMPERATA cylindrica | Cogon Grass | 75mm | | |
| LOMhys | LOMANDRA hystrix | Creek Matt Rush | 75mm | | |
| LOMlon | LOMANDRA longifolia | Long Leaved Mat Rush | 75mm | | |
| THEaus | THEMEDA australis | Kangaroo Grass | 75mm | | |

## BIO BASIN 'B': BATTER PLANTING (B2)

**TOTAL AREA: 7287.05M²**

| TREES | | | | | |
|---|---|---|---|---|---|
| CODE | SPECIES | COMMON NAME | SIZE | DENSITY | QTY |
| CALvim | CALLISTEMON viminalis | Weeping Bottlebrush | 75mm | 1/10M² | 729 |
| EUCobo | EUCALYPTUS obovatus | Hard Quandong | 75mm | | |
| LOPcon | LOPHOSTEMON confertus | Brush Box | 75mm | | |
| LOPsua | LOPHOSTEMON suavolens | Swamp Mahogany | 75mm | | |
| MELnod | MELALEUCA nodosa | Prickly-Leaf Paperbark | 75mm | | |
| MELqui | MELALEUCA quinquenerva | Cajuput Paperbark | 75mm | | |
| MELsie | MELALEUCA sieberi | Small-Leaved Paperbark | 75mm | | |

| SHRUBS | | | | | |
|---|---|---|---|---|---|
| CODE | SPECIES | COMMON NAME | SIZE | DENSITY | QTY |
| BREobl | BREYNIA oblongifolia | Coffee Bush | 75mm | 4/10M² | 2915 |
| CALsie | CALLISTEMON sieberi | River Bottlebrush | 75mm | | |
| HARvio | HARDENBERGIA violacea | Purple Coral Pea | 75mm | | |
| LEPpol | LEPTOSPERMUM polygalifolium | Wild May | 75mm | | |
| LOMsil | LOMATIA silaifolia | Feather Leaved Crinklebush | 75mm | | |

| GROUNDCOVERS | | | | | |
|---|---|---|---|---|---|
| CODE | SPECIES | COMMON NAME | SIZE | DENSITY | QTY |
| CARapp | CAREX appressa | Tall Sedge | 75mm | 4PM² | 29148 |
| FINnod | FINICIA nodosa | Knobby Club Rush | 75mm | | |
| IMPcyl | IMPERATA cylindrica | Cogon Grass | 75mm | | |
| LOMhys | LOMANDRA hystrix | Creek Matt Rush | 75mm | | |
| LOMlon | LOMANDRA longifolia | Long Leaved Mat Rush | 75mm | | |
| MYOpar | MYOPORUM parvifolium | Creeping Boobialla | 75mm | | |
| THEaus | THEMEDA australis | Kangaroo Grass | 75mm | | |

## BIO BASIN 'B': RIBBON PLANTING (B3)

**TOTAL AREA: 677.45M²**

| GROUNDCOVERS | | | | | |
|---|---|---|---|---|---|
| CODE | SPECIES | COMMON NAME | SIZE | DENSITY | QTY |
| LOMhys | LOMANDRA hystrix | Creek Matt Rush | 75mm | 2PM² | 1354 |
| LOMlon | FINICIA nodosa | Knobby Club Rush | 75mm | | |

### LEGEND - BIO BASIN B

- **B1** — **BIO BASIN:** BASE PLANTING
  REFER BIO BASIN PLANS.
  REFER CIVIL/STORMWATER PLAN FOR FURTHER INFO.
  **BIO BASIN 'B' PLANTING AREA:** 576.60M²
- **B2** — **BIO BASIN:** BATTER PLANTING
  REFER BIO BASIN PLANS.
  REFER CIVIL/STORMWATER PLAN FOR FURTHER INFO.
  **BIO BASIN 'B' PLANTING AREA:** 7287.05M²
- **B3** — **BIO BASIN:** RIBBON PLANTING
  REFER BIO BASIN PLANS.
  REFER CIVIL/STORMWATER PLAN FOR FURTHER INFO.
  **BIO BASIN 'B' PLANTING AREA:** 677.45M²

0 5 10 15 20m

SCALE 1:200 @A1

**PROJECT TITLE**

**CALLI |** SUBDIVISION: STAGE 02

OPERATIONAL WORKS: LANDSCAPE

**DRAWING TITLE**

BIO-RETENTION BASIN B SOUTH

| REV | DESCRIPTION | DATE | DRAWN | DESIGN | CHECK | APP |
|---|---|---|---|---|---|---|
| B | FOR APPROVAL | 28.08.2024 | MB | MB | MB | JB |
| A | PRELIMINARY ISSUE | 28.08.2024 | SS | MB | MB | JB |

**ISSUE:** FOR APPROVAL

**CLIENT:** HB LAND PTY LTD

**BASE PROVIDED BY:** MORTONS URBAN SOLUTIONS

**MANAGER:** JON BROOKSBY

COPYRIGHT Zone Landscape 2018. This document and the information are solely for the use of the authorised recipient and this document may not be used, copied or reproduced in whole or part for any purpose other than that for which it was supplied by Zone Landscape 2018. Zone Landscape makes no representation, undertakes no duty and accepts no responsibility to any third party who may use or rely upon this document or the information.

zone Landscape Architecture

**ZONE LANDSCAPE ARCHITECTURE**

**GOLD COAST**
1638 Tweed Street, Burleigh Heads QLD 4220
PO Box 3805, Burleigh Town QLD 4220

**GLADSTONE**
2/172 Goondoon St, Gladstone, QLD 4680
PO Box 5332, Gladstone QLD 4680

zonelandscape.com.au | 07 55622303

**JOB / DRAWING NO:** L23108 - 205

**SHEET NO.** 08 OF 12

PLOTTED BY: Luke Lindon(ZOZO) L23108 99 Country Drive, Upper Coomera, QRWG, QRWG, WORKING DRAWINGS\CAD\L23108_OPW STG 02.dwg [TK OTTER] 9/02/2024 12:24 PM

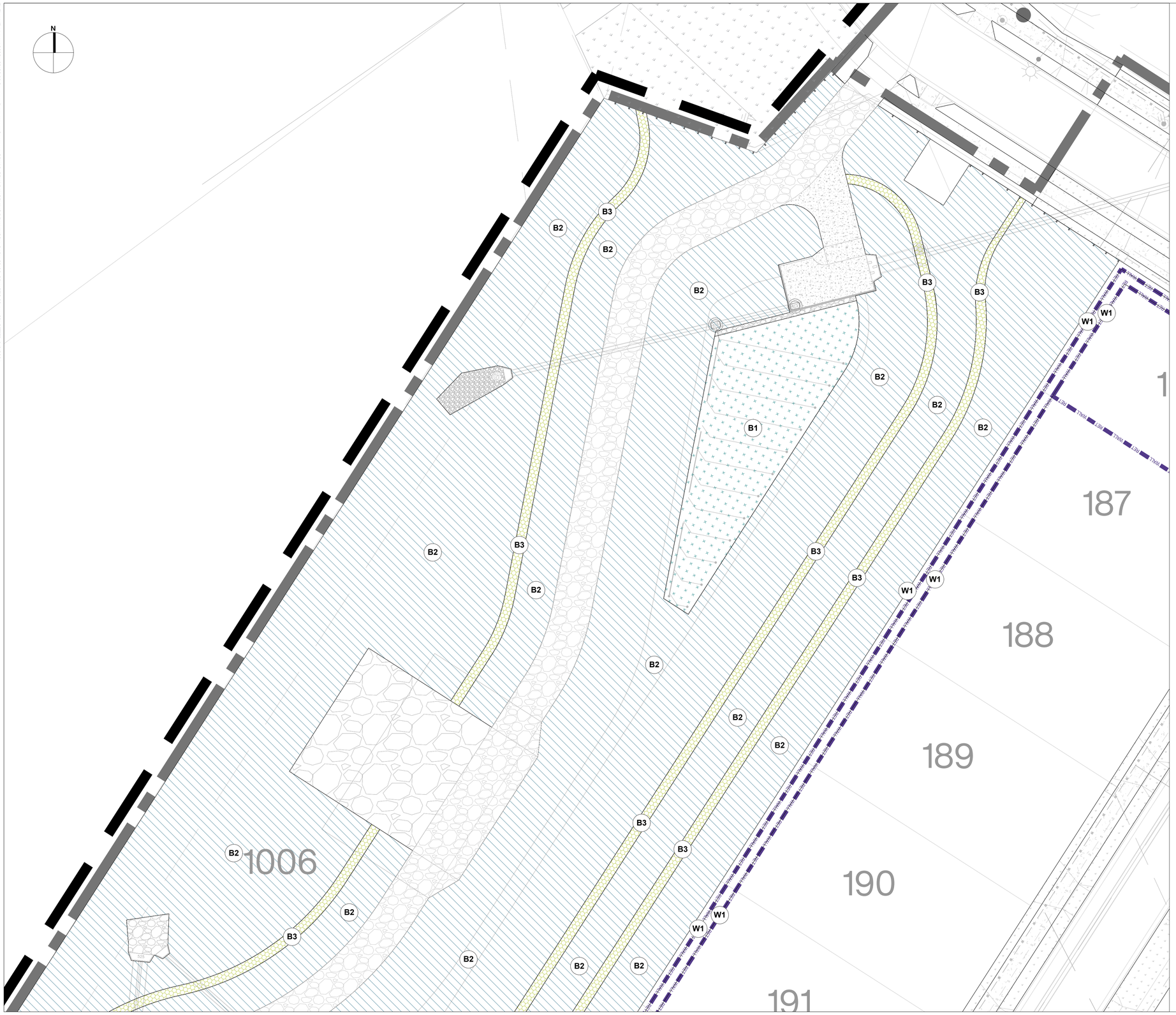


## BIO BASIN 'B': BASE PLANTING (B1)

**TOTAL AREA: 576.60M²**

| GROUNDCOVERS | | | | | |
|---|---|---|---|---|---|
| CODE | SPECIES | COMMON NAME | SIZE | DENSITY | QTY |
| CARapp | CAREX appressa | Tall Sedge | 75mm | 6PM² | 3462 |
| FINnod | FINICIA nodosa | Knobby Club Rush | 75mm | | |
| IMPcyl | IMPERATA cylindrica | Cogon Grass | 75mm | | |
| LOMhys | LOMANDRA hystrix | Creek Matt Rush | 75mm | | |
| LOMlon | LOMANDRA longifolia | Long Leaved Mat Rush | 75mm | | |
| THEaus | THEMEDA australis | Kangaroo Grass | 75mm | | |

## BIO BASIN 'B': BATTER PLANTING (B2)

**TOTAL AREA: 7287.05M²**

| TREES | | | | | |
|---|---|---|---|---|---|
| CODE | SPECIES | COMMON NAME | SIZE | DENSITY | QTY |
| CALvim | CALLISTEMON viminalis | Weeping Bottlebrush | 75mm | 1/10M² | 729 |
| EUCobo | EUCALYPTUS obovatus | Hard Quandong | 75mm | | |
| LOPcon | LOPHOSTEMON confertus | Brush Box | 75mm | | |
| LOPsua | LOPHOSTEMON suavolens | Swamp Mahogany | 75mm | | |
| MELnod | MELALEUCA nodosa | Prickly-Leaf Paperbark | 75mm | | |
| MELqui | MELALEUCA quinquenerva | Cajuput Paperbark | 75mm | | |
| MELsie | MELALEUCA sieberi | Small-Leaved Paperbark | 75mm | | |

| SHRUBS | | | | | |
|---|---|---|---|---|---|
| CODE | SPECIES | COMMON NAME | SIZE | DENSITY | QTY |
| BREobl | BREYNIA oblongifolia | Coffee Bush | 75mm | 4/10M² | 2915 |
| CALsie | CALLISTEMON sieberi | River Bottlebrush | 75mm | | |
| HARvio | HARDENBERGIA violacea | Purple Coral Pea | 75mm | | |
| LEPpol | LEPTOSPERMUM polygalifolium | Wild May | 75mm | | |
| LOMsil | LOMATIA silaifolia | Feather Leaved Crinklebush | 75mm | | |

| GROUNDCOVERS | | | | | |
|---|---|---|---|---|---|
| CODE | SPECIES | COMMON NAME | SIZE | DENSITY | QTY |
| CARapp | CAREX appressa | Tall Sedge | 75mm | 4PM² | 29148 |
| FINnod | FINICIA nodosa | Knobby Club Rush | 75mm | | |
| IMPcyl | IMPERATA cylindrica | Cogon Grass | 75mm | | |
| LOMhys | LOMANDRA hystrix | Creek Matt Rush | 75mm | | |
| LOMlon | LOMANDRA longifolia | Long Leaved Mat Rush | 75mm | | |
| MYOpar | MYOPORUM parvifolium | Creeping Boobialla | 75mm | | |
| THEaus | THEMEDA australis | Kangaroo Grass | 75mm | | |

## BIO BASIN 'B': RIBBON PLANTING (B3)

**TOTAL AREA: 677.45M²**

| GROUNDCOVERS | | | | | |
|---|---|---|---|---|---|
| CODE | SPECIES | COMMON NAME | SIZE | DENSITY | QTY |
| LOMhys | LOMANDRA hystrix | Creek Matt Rush | 75mm | 2PM² | 1354 |
| LOMlon | FINICIA nodosa | Knobby Club Rush | 75mm | | |

**LEGEND - BIO BASIN B**

- B1 — **BIO BASIN:** BASE PLANTING
  REFER BIO BASIN PLANS.
  REFER CIVIL/STORMWATER PLAN FOR FURTHER INFO.
  **BIO BASIN 'B' PLANTING AREA:** 576.60M²
- B2 — **BIO BASIN:** BATTER PLANTING
  REFER BIO BASIN PLANS.
  REFER CIVIL/STORMWATER PLAN FOR FURTHER INFO.
  **BIO BASIN 'B' PLANTING AREA:** 7287.05M²
- B3 — **BIO BASIN:** RIBBON PLANTING
  REFER BIO BASIN PLANS.
  REFER CIVIL/STORMWATER PLAN FOR FURTHER INFO.
  **BIO BASIN 'B' PLANTING AREA:** 677.45M²

0 5 10 15 20m
SCALE 1:200 @A1

**PROJECT TITLE**

**CALLI** | SUBDIVISION: STAGE 02

OPERATIONAL WORKS: LANDSCAPE

**DRAWING TITLE**

BIO-RETENTION BASIN B NORTH

| REV | DESCRIPTION | DATE | DRAWN | DESIGN | CHECK | APP |
|---|---|---|---|---|---|---|
| B | FOR APPROVAL | 28.08.2024 | MB | MB | MB | JB |
| A | PRELIMINARY ISSUE | 28.08.2024 | SS | MB | MB | JB |

**ISSUE:** FOR APPROVAL

**CLIENT:** HB LAND PTY LTD

**BASE PROVIDED BY:** MORTONS URBAN SOLUTIONS

**MANAGER:** JON BROOKSBY

COPYRIGHT Zone Landscape 2018. This document and the information are solely for the use of the authorised recipient and this document may not be used, copied or reproduced in whole or part for any purpose other than that for which it was supplied by Zone Landscape 2018. Zone Landscape makes no representation, undertakes no duty and accepts no responsibility to any third party who may use or rely upon this document or the information.

zone Landscape Architecture

**ZONE LANDSCAPE ARCHITECTURE**

**GOLD COAST**
1638 Tweed Street, Burleigh Heads QLD 4220
PO Box 3805, Burleigh Town QLD 4220

**GLADSTONE**
2/172 Goondoon St, Gladstone, QLD 4680
PO Box 5332, Gladstone QLD 4680

zonelandscape.com.au | 07 55622303

**JOB / DRAWING NO:** L23108 - 206

**SHEET NO.** 09 OF 12

PLOTTED BY: L:\Jobs\2023\L23108 99 Country Drive, Upper Coomera_QRV\L2_QRV\L3_WORKING\DRAWINGS\LCAD\L23108_QRV STG 02.dwg | PLOTTED: 9/02/2024 12:24 PM

PLOTTED BY: Luke Bell | LastSaved: 2024-08-28 12:24 PM | File Location: J:\L23108 99 Courtney Drive, Upper Coomera_OPWS_OPWS_WORKING\DRAWINGS\L23108_OPWS STG 02.dwg

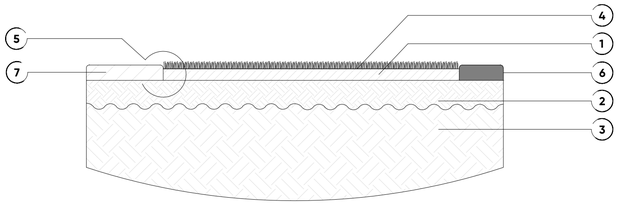


## D01 TYPICAL DETAIL 01 - TURF

REFER ALSO SPECIFICATIONS FOR FURTHER DETAILS

REFER TO DETAILED SPECIFICATION REGARDING SOIL AND MULCH TYPES, ALL ASSOCIATED MATERIAL QUALITY REQUIREMENTS AND STANDARDS INCLUDING REQUIRED HOLD POINTS AND GENERAL MAINTENANCE REQUIREMENTS

### INSTALLATION

1.0 PREPARE PLANTING AREA TO ENSURE SOIL PROFILE AS SPECIFIED (TYPICAL PREPARATION OF 100MM DEPTH TO ALLOW FOR TURF UNDERLAY AND ROLL TURF INSTALLATION WORKS).
2.0 CULTIVATE THE SURROUNDING SUBGRADE TO A FURTHER 100MM IN DEPTH AND REMOVE ANY STONE OR ROCK EXCEEDING 50MM IN DIAMETER AS WELL AS ANY ORGANIC MATERIAL SUCH AS ROOTS STICK CLODS OR WEEDS (BROUGHT IN THROUGH EXCAVATION PROCESS). IN GENERAL, REMOVE ANY ALL MATERIAL OR DEBRIS THAT WOULD BE DETRIMENTAL TO TURF HEALTH.
3.0 SUBGRADE TO BE EVALUATED ON SITE TO ASSESS PERMEABILITY AND GENERAL TYPE TO EVALUATE REQUIREMENT FOR ADDITIONAL DRAINAGE WORKS AND OR CULTIVATION WORKS TO ENSURE NIL ADVERSE IMPACTS ON TURF HEALTH.
4.0 INSTALL TURF UNDERLAY AT DEPTH OF 75MM. REFER TO SPECIFICATIONS FOR UNDERLAY TYPE AND INSTALL PARAMETERS.
5.0 REFER TO PLANS AND SPECIFICATIONS RE TURF TYPE AND ESTABLISHMENT REQUIREMENTS (ROLLING, WATERING, FERTALISING AND GENERAL MAINTENANCE PARAMETERS). TURF PLACEMENT TO ACHEVE LEVEL FINISH AT GRADES AND FINISHED LEVELS AS DICTATED THIS DOCUMENT.
6.0 REFER TO PLANS AND RELEVANT STANDARD DETAILS FOR TURF EDGE TREATMENTS WHERE NOT ABUTTING PATHWAY, PLANTER, KERB OR OTHER.
7.0 REFER TO PLANS AND RELEVANT STANDARD DETAIL FOR ADJACENT LANDSCAPE TREATMENTS.

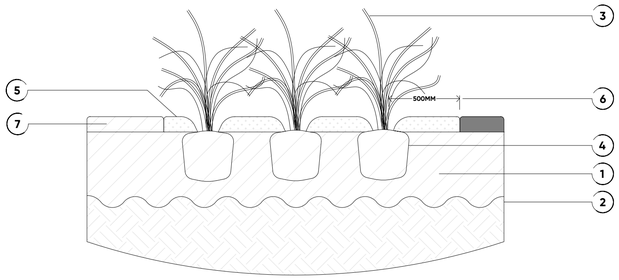


## D02 TYPICAL DETAIL 02 - GENERAL PLANTING

REFER ALSO SPECIFICATIONS FOR FURTHER DETAILS

REFER TO DETAILED SPECIFICATION REGARDING SOIL AND MULCH TYPES, ALL ASSOCIATED MATERIAL QUALITY REQUIREMENTS AND STANDARDS INCLUDING REQUIRED HOLD POINTS AND GENERAL MAINTENANCE REQUIREMENTS

### INSTALLATION

1.0 PREPARE PLANTING AREA TO ENSURE SOIL PROFILE AS SPECIFIED (TYPICAL MINIMUM 300MM SOIL IMPORT OR IMPROVED SITE SOIL TO AS4419-2003, REFER TO SPECIFICATIONS).
2.0 CULTIVATE THE SURROUNDING SUBGRADE TO 100MM IN DEPTH AND REMOVE ANY STONE OR ROCK EXCEEDING 50MM IN DIAMETER AS WELL AS ANY ORGANIC MATERIAL SUCH AS ROOTS STICK CLODS OR WEEDS (BROUGHT IN THROUGH EXCAVATION PROCESS). IN GENERAL, REMOVE ANY ALL MATERIAL OR DEBRIS THAT WOULD BE DETRIMENTAL TO PLANT HEALTH.
3.0 PLANT TYPE, SIZE, DENSITIES AND LOCATION AS SPECIFIED ON PLANS AND PLANTING SCHEDULES.
4.0 INSTALL SLOW RELEASE FERTALISER IN LINE WITH BEST PRACTICE OR AS SPECIFIED IN THIS DOCUMENT.
5.0 INSTALL MULCH AS SPECIFIED TO A DEPTH OF 100MM. ENSURE MULCH IS PLACED MINIMUM 500MM FROM PLANT STEMS. MULCH SHOULD BE PROFILED GENERALLY AS ILLUSTRATED TO CREATE A 'WELL' AROUND THE PLANT STOCK TO PROMOTE WATER RETENTION.
6.0 ENSURE MINIMUM OFFSET OF 500MM FROM ANY PATHWAYS, FENCE LINES, FOOTINGS ETC OR AS SPECIFIED IN THIS DOCUMENT
7.0 REFER TO PLANS AND RELEVANT STANDARD DETAIL FOR ADJACENT LANDSCAPE TREATMENTS.

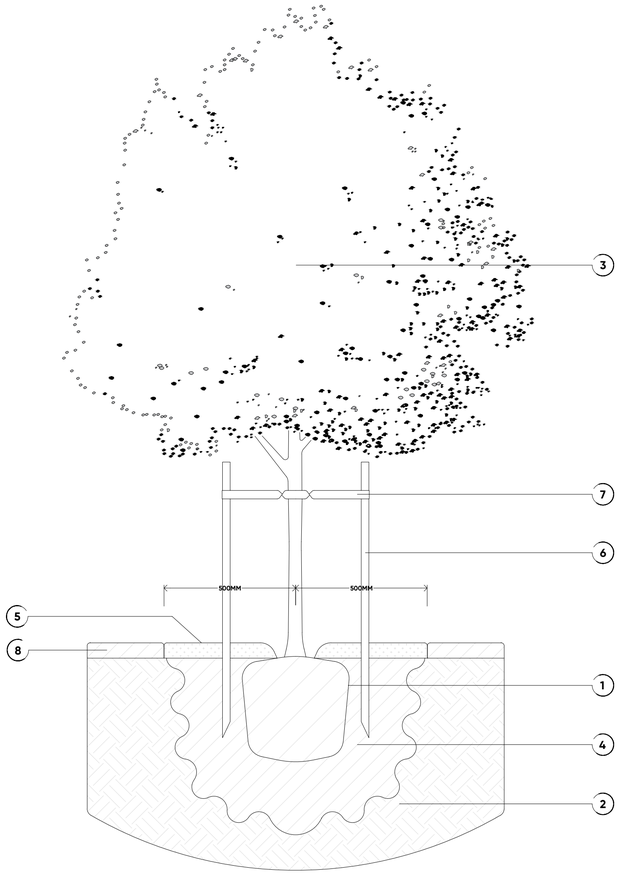


## D03 TYPICAL DETAIL 03 - TREE PLANTING

REFER ALSO SPECIFICATIONS FOR FURTHER DETAILS

REFER TO DETAILED SPECIFICATION REGARDING SOIL AND MULCH TYPES, ALL ASSOCIATED MATERIAL QUALITY REQUIREMENTS AND STANDARDS INCLUDING REQUIRED HOLD POINTS AND GENERAL MAINTENANCE REQUIREMENTS

### INSTALLATION

1.0 EXCAVATE HOLE TO MINIMUM 2X WIDTH AND 2X DEPTH OF ROOTBALL.
2.0 CULTIVATE THE SURROUNDING SUBGRADE TO 200MM IN DEPTH AND REMOVE ANY STONE OR ROCK EXCEEDING 50MM IN DIAMETER AS WELL AS ANY ORGANIC MATERIAL SUCH AS ROOTS STICK CLODS OR WEEDS (BROUGHT IN THROUGH EXCAVATION PROCESS). IN GENERAL, REMOVE ANY ALL MATERIAL OR DEBRIS THAT WOULD BE DETRIMENTAL TO PLANT HEALTH. A TREE HOLE INSPECTION WILL BE REQUIRED PRIOR TO INSTALL OF TREES UNLESS STATED OTHERWISE. ENSURE LIAISON WITH PROJECT MANAGER OR LANDSCAPE SUPERINTENDENT / ARCHITECT PRIOR TO PROCEEDING WITH PLANTING WORKS.
3.0 TREE TYPE, SIZE AND LOCATION AS SPECIFIED ON PLANS AND PLANTING SCHEDULES.
4.0 BACKFILL TREE HOLE WITH SOIL AS SPECIFIED. SOIL SHALL COMPLY WITH AS4419-2003 - INSTALL SLOW RELEASE FERTALISER IN LINE WITH BEST PRACTICE OR AS SPECIFIED IN THIS DOCUMENT.
5.0 INSTALL MULCH COLLAR, THIS IS TYPICALLY TO BE MINIMUM 500MM RADIUS UNLESS OTHERWISE STATED ON PLANS AND IS TO BE AT A DEPTH OF 100MM. ENSURE MULCH IS PLACED MINIMUM 100MM FROM TREE STEM TO PREVENT COLLAR ROT. MULCH SHOULD BE PROFILED GENERALLY AS ILLUSTRATED TO CREATE A 'WELL' AROUND THE TREE TO PROMOTE WATER RETENTION.
6.0 STAKE TREES AS SPECIFIED : STAKES TO BE 1800 X 50 X 50MM WITH 600MM INTO GROUND ENSURING 1200MM REMAINS ABOVE GROUND. ENSURE STAKES ARE CLEAR OF ROOT BALL.
7.0 TIE TREE TO STAKES WITH 50MM HESSIAN OR RUBBERISED BLACK PVC IN A FIGURE OF EIGHT. ENSURE NURSERY STAKES ARE REMOVED.
8.0 REFER TO PLANS AND RELEVANT STANDARD DETAIL FOR ADJACENT LANDSCAPE TREATMENTS.

### GENERAL

IMPORTANT: TREES ARE TO ABIDE BY LOCAL COUNCIL TREE STOCK REQUIREMENT STANDARDS. THESE STANDARDS WILL BE REVIEWED AT FORMAL TREE HOLE INSPECTION WITH COUNCIL ASSESSING OFFICER. THESE ARE DETAILED WITHIN THE ASSOCIATED SPECIFICATIONS AND CAN GENERALLY BE SUMMARISED AS:

- ALL TREES HOLES MARKED OUT IN ACCORDANCE WITH APPROVAL AND COMPLY WITH ALL COUNCIL STANDARD OFFSET.
- TREE HOLE DIMENSIONS AND PREPARATION PARAMETERS ARE AS PER THOSE STATED ABOVE
- TREE HOLES DO NOT IMPACT ON SERVICES OR OTHER INFRASTRUCTURE
- ALL TREES ARE AS PER NATSPEC SPECIFICATIONS INCLUDING CORRECT FORM AND STRUCTURE.
- STREET TREES AND FEATURE TREES TO HAVE A MINIMUM 900MM TREE TRUNK AND BE 2000MM IN HEIGHT AT TIME OF PLANTING

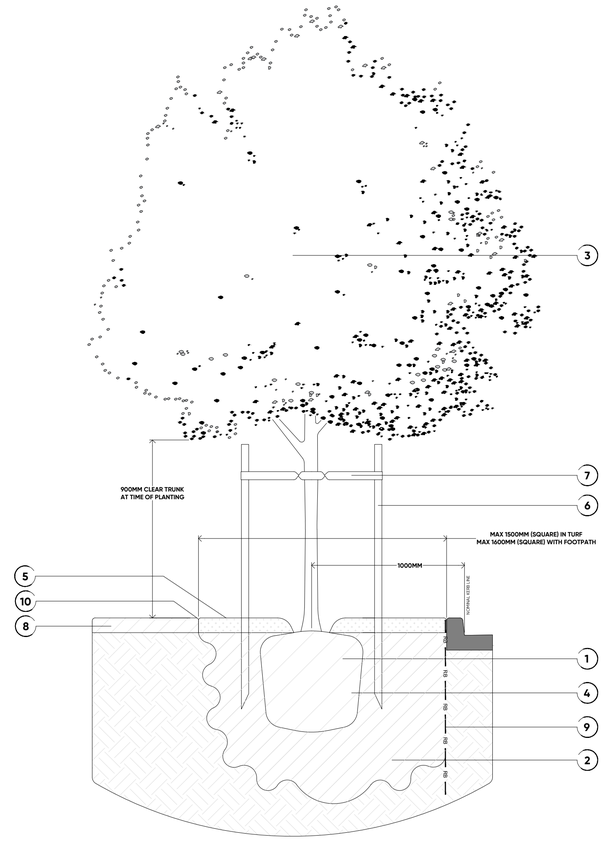


NOTE: THIS TREE PLANTING DETAIL GENERALLY ABIDES BY CoGC STANDARDS. REFER TO STANDARD DRAWING 05-102 2015 EDITION FOR FURTHER INFORMATION.

## D04 TYPICAL DETAIL 04 - STREET TREE PLANTING (CoGC)

REFER ALSO SPECIFICATIONS FOR FURTHER DETAILS

REFER TO DETAILED SPECIFICATION REGARDING SOIL AND MULCH TYPES, ALL ASSOCIATED MATERIAL QUALITY REQUIREMENTS AND STANDARDS INCLUDING REQUIRED HOLD POINTS AND GENERAL MAINTENANCE REQUIREMENTS

### INSTALLATION

1.0 EXCAVATE HOLE TO MINIMUM 2X WIDTH AND 2X DEPTH OF ROOTBALL.
2.0 CULTIVATE THE SURROUNDING SUBGRADE TO 200MM IN DEPTH AND REMOVE ANY STONE OR ROCK EXCEEDING 50MM IN DIAMETER AS WELL AS ANY ORGANIC MATERIAL SUCH AS ROOTS STICK CLODS OR WEEDS (BROUGHT IN THROUGH EXCAVATION PROCESS). IN GENERAL, REMOVE ANY ALL MATERIAL OR DEBRIS THAT WOULD BE DETRIMENTAL TO PLANT HEALTH. A TREE HOLE INSPECTION WILL BE REQUIRED PRIOR TO INSTALL OF TREES UNLESS STATED OTHERWISE. ENSURE LIAISON WITH PROJECT MANAGER OR LANDSCAPE SUPERINTENDENT / ARCHITECT PRIOR TO PROCEEDING WITH PLANTING WORKS.
3.0 TREE TYPE, SIZE AND LOCATION AS SPECIFIED ON PLANS AND PLANTING SCHEDULES (MIN 45LTR).
4.0 BACKFILL TREE HOLE WITH SOIL AS SPECIFIED. SOIL SHALL COMPLY WITH AS4419-2003 - INSTALL SLOW RELEASE FERTALISER IN LINE WITH BEST PRACTICE OR AS SPECIFIED IN THIS DOCUMENT.
5.0 INSTALL MULCH COLLAR, THIS IS TYPICALLY TO BE MINIMUM 500MM RADIUS UNLESS OTHERWISE STATED ON PLANS AND IS TO BE AT A DEPTH OF 100MM. ENSURE MULCH IS PLACED MINIMUM 100MM FROM TREE STEM TO PREVENT COLLAR ROT. MULCH SHOULD BE PROFILED GENERALLY AS ILLUSTRATED TO CREATE A 'WELL' AROUND THE TREE TO PROMOTE WATER RETENTION.
6.0 STAKE TREES AS SPECIFIED : STAKES TO BE 1800 X 50 X 50MM WITH 600MM INTO GROUND ENSURING 1200MM REMAINS ABOVE GROUND. ENSURE STAKES ARE CLEAR OF ROOT BALL.
7.0 TIE TREE TO STAKES WITH 50MM HESSIAN OR RUBBERISED BLACK PVC IN A FIGURE OF EIGHT. ENSURE NURSERY STAKES ARE REMOVED.
8.0 REFER TO PLANS AND RELEVANT STANDARD DETAIL FOR ADJACENT LANDSCAPE TREATMENTS.
9.0 INSTALL ROOT GUARD TO DEPTH 1200MM. REFER TO SPECIFICATION FOR TYPE. AS PER DETAIL, ROOT GUARDS ARE TYPICALLY PLACED TO REAR OF KERB HOWEVER MAY BE SPECIFIED TO ADDITIONAL AREAS AS DETERMINED BY PROXIMITY TO SERVICES ETC. REFER TO TO SETOUT PLAN FOR CONFIRMATION OF LOCATION.
10.0 SPADE EDGE TO ALL VERGE TURF/MULCH RING INTERFACES.

### GENERAL

IMPORTANT: TREES ARE TO ABIDE BY LOCAL COUNCIL TREE STOCK REQUIREMENT STANDARDS. THESE STANDARDS WILL BE REVIEWED AT FORMAL TREE HOLE INSPECTION WITH COUNCIL ASSESSING OFFICER. THESE ARE DETAILED WITHIN THE ASSOCIATED SPECIFICATIONS AND CAN GENERALLY BE SUMMARISED AS:

- ALL TREES HOLES MARKED OUT IN ACCORDANCE WITH APPROVAL AND COMPLY WITH ALL COUNCIL STANDARD OFFSETS.
- TREE HOLE DIMENSIONS AND PREPARATION PARAMETERS ARE AS PER THOSE STATED ABOVE.
- TREE HOLES DO NOT IMPACT ON SERVICES OR OTHER INFRASTRUCTURE .
- ALL TREES ARE AS PER NATSPEC SPECIFICATIONS INCLUDING CORRECT FORM AND STRUCTURE.
- STREET TREES AND FEATURE TREES TO HAVE A MINIMUM 900MM TREE TRUNK AND BE 2000MM IN HEIGHT AT TIME OF PLANTING .

### STREET TREE SPECIFIC

STREET TREE LOCATION SUBJECT TO CHANGE BASED ON DRIVEWAY AND SERVICES LOCATIONS.
GENERAL ALLOWANCE OF 1 TREE PER LOT.
LOCATIONS TO BE VERIFIED BY LOCAL COUNCIL AND LANDSCAPE ARCHITECT AT TREE HOLE INSPECTION
TREES ARE NOT TO BE PLANTED WITHIN:

- 3M OF RESIDENTIAL ACCESSES
- A MINIMUM OF 15 METERS OF THE APPROACH SIDE OF ANY STREET INTERSECTION TO MAINTAIN SIGHT LINES - 6 METERS OF DEPARTURE
- 6 METERS OF A DEPARTURE SIDE OF A PEDESTRIAN CROSSING, BUS STOP SIGN OR SHELTER TO MAINTAIN SIGHT LINES
- 3M TO EITHER SIDE OF A FOOTPATH CROSSOVER INCLUDING BIKEWAYS AND PATHS
- 2.5 METERS OF ELECTRICITY / TELEPHONE POLES
- MINIMUM 2 METERS FROM SERVICES
- MINIMUM 7 METERS FROM STREET LIGHTS
- MINIMUM 4 METERS FROM HIGH VOLTAGE TRANSMISSION LINES
- 4.5 METERS FROM A MAJOR VEHICULAR ACCESS CROSSING
- 3 METERS FROM A FIRE HYDRANT

PROJECT TITLE

**CALLI | SUBDIVISION: STAGE 02**

OPERATIONAL WORKS: LANDSCAPE

DRAWING TITLE

DETAIL DRAWINGS 01

| REV | DESCRIPTION | DATE | DRAWN | DESIGN | CHECK | APP |
|---|---|---|---|---|---|---|
| B | FOR APPROVAL | 28.08.2024 | MB | MB | MB | JB |
| A | PRELIMINARY ISSUE | 28.08.2024 | SS | MB | MB | JB |

ISSUE: FOR APPROVAL

CLIENT: HB LAND PTY LTD

BASE PROVIDED BY: MORTONS URBAN SOLUTIONS

MANAGER: JON BROOKSBY

COPYRIGHT Zone Landscape 2018. This document and the information are solely for the use of the authorised recipient and this document may not be used, copied or reproduced in whole or part for any purpose other than that for which it was supplied by Zone Landscape 2018. Zone Landscape makes no representation, undertakes no duty and accepts no responsibility to any third party who may use or rely upon this document or the information.

ZONE LANDSCAPE ARCHITECTURE

GOLD COAST
1638 Tweed Street, Burleigh Heads QLD 4220
PO Box 3805, Burleigh Town QLD 4220

GLADSTONE
2/172 Goondoon St, Gladstone, QLD 4680
PO Box 5332, Gladstone QLD 4680

zonelandscape.com.au | 07 55622303

JOB / DRAWING NO: L23108 - 300

SHEET NO. 10 OF 12

PLOTTED BY: Luke.Lo(ZOZO), Z3188 99 Country Drive, Upper Coomera, QRWVL, QRWVL, WORKING DRAWINGS\L23108_QRWV STD (02.dwg) | PLOTTED: 9/02/2024 12:28 PM

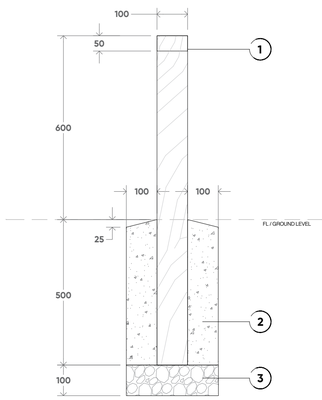


A **TYPICAL ELEVATION -** BOLLARD FRONT

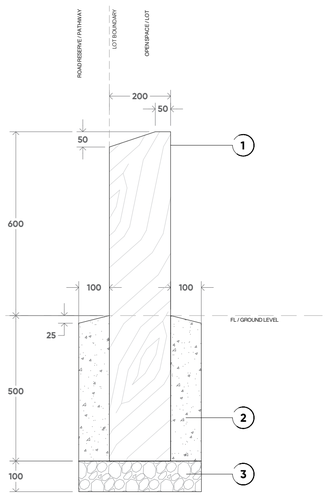


B **TYPICAL ELEVATION -** BOLLARD SIDE

## D05 TYPICAL DETAIL 05 - TIMBER BOLLARD (CoGC STD DWG 05-716)

REFER ALSO SPECIFICATIONS FOR FURTHER DETAILS — SCALE 1:10 - REFER NOTED DIMENSIONS

REFER TO LANDSCAPE PLANS RE LOCATION AND SETOUT. TYPICALLY ALL BOLLARDS ARE TO BE INSTALLED WITH PUBLIC LOT / LOT REFERENCED AS THE SUBJECT SITE IN ALL / ANY ASSOCIATED APPROVALS. FACE OF BOLLARD TO BE ALIGNED WITH LOT BOUNDARY UNLESS OFFSET IS PROPOSED - REFER PLANS FOR ALIGNMENT AND SETOUT.

CONFIRM ALL MATERIAL SPECIFICATIONS IN THE MATERIALS AND FINISHES SCHEDULE FOR THIS PROJECT.

### GENERAL SPECIFICATIONS

1.0 200 X 100MM F14 DURABILITY CLASS 1 HWD POST PRESERVATIVE TREATED TO H5 : DAR WITH 5MM CHAMFER TO ALL EXPOSED EDGES
2.0 25MPA NO FINES CONCRETE FOOTING 100MM COVER TO ALL SIDES. TAPER AWAY FROM BOLLARD AND ENSURE SURROUNDING FINISH (EG MULCH OR TURF) COVERS FOOTING.
3.0 COMPACTED ROAD BASE

### INSTALLATION

REFER TO PLANS AND SPECIFICATION RE LOCATION OF ALL SERVICES AND CONFIRM ONSITE WITH RELEVANT AUTHORITIES AND DBYD PRIOR TO ANY EXCAVATIONS WORKS
TIMBER FINISH : PAINT ALL SURFACES WITH INDUSTRIAL CLEAR WATER REPELLANT TO LOCK IN CHEMICALS USED IN CCA IN ACCORDANCE WITH AS1607
REFER TO MATERIAL & FINISHES SPECIFICATION FOR STAIN COLOUR

### AUSTRALIAN STANDARDS (SUMMARY ONLY)

CONCRETE - N32 IN ACCORDANCE WITH AS 1379
REFLECTIVE TAPE - IN ACCORDANCE WITH AS 1906.1
SEALING TREATMENT - IN ACCORDANCE WITH AS 1607

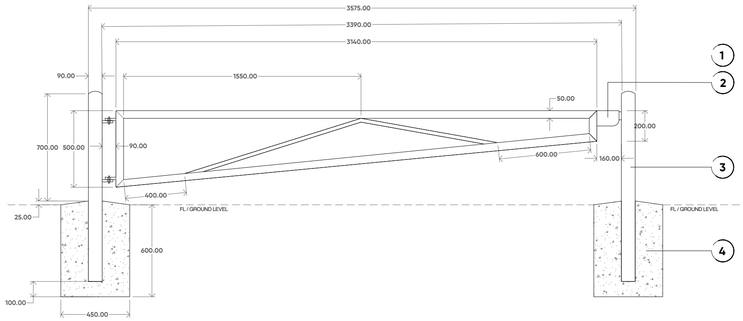


## D06 TYPICAL DETAIL 06 - ACCESS GATE (CoGC STD DWG 13-05-16)

REFER ALSO TO SPECIFICATIONS FOR FURTHER DETAILS — SCALE - REFER NOTED DIMENSIONS

REFER TO LANDSCAPE PLANS RE LOCATION AND SETOUT. CONFIRM ALL MATERIAL SPECIFICATIONS IN THE MATERIALS AND FINISHES SCHEDULE FOR THIS PROJECT.

### GENERAL SPECIFICATIONS

1.0 25 O.D GALVANISED PIPE
2.0 REFER TO STD. DWG. 05-017 FOR DETAILS OF LOCK
3.0 90 O.D GALVANISED PIPE TO BE CONCRETE FILLED
4.0 25MPA CONCRETE FOOTING.

### INSTALLATION

REFER TO PLANS AND SPECIFICATION RE LOCATION OF ALL SERVICES AND CONFIRM ONSITE WITH RELEVANT AUTHORITIES AND DBYD PRIOR TO ANY EXCAVATIONS WORKS.
PIPES : TO BE MEDIUM GAUGE HEAVY GALVANISED FINISHED WITH TWO COATS OF TWO PACK 125 MICRON MINIMUM TOTAL THICKNESS. COLOUR TO MATCH COLORBOND 'CAULFIELD GREEN'
WELDS : ALL WELDS AND BARE METAL TO BE THOROUGHLY CLEANED AND PAINTED WITH COLD GALVANISING PRIMER PRIOR TO FINISH COAT
REFER TO MATERIAL & FINISHES SPECIFICATION FOR STAIN COLOUR

### AUSTRALIAN STANDARDS (SUMMARY ONLY)

CONCRETE - 25MPA
SEALING TREATMENT - IN ACCORDANCE WITH AS 1607
WELDS TO AS1554

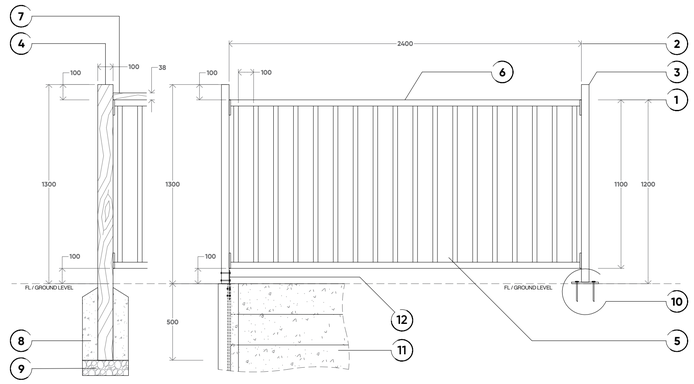


## D07 TYPICAL DETAIL 07 - POS INTERFACE FENCE (VARIOUS INSTALLATION SYSTEMS)

REFER ALSO SPECIFICATIONS FOR FURTHER DETAILS — SCALE - REFER NOTED DIMENSIONS

REFER TO LANDSCAPE PLANS RE LOCATION AND SETOUT. TYPICALLY ALL FENCES ARE TO BE INSTALLED WITH PUBLIC LOT / LOT REFERENCED AS SUBJECT SITE IN ALL / ANY ASSOCIATED APPROVALS. FACE OF FENCE TO BE ALIGNED WITH LOT BOUNDARY UNLESS OFFSET IS PROPOSED - REFER PLANS FOR ALIGNMENT AND SETOUT.

FOR THE PURPOSES OF THIS PROJECT <INSERT PROJECT NAME> THE APPROVED PRODUCT AND ASSOCIATED SPECIFICATIONS ARE NOTED BELOW. AN APPROVED EQUIVALENT CAN BE USED HOWEVER MUST BE IN GENERAL ACCORDANCE WITH THE SPECIFICATIONS AS DETAILED BELOW AND IN STRICT ADHERENCE TO RELEVANT AUSTRALIAN STANDARDS AND LOCAL GOVERNMENT BUILDING REGULATIONS AND MUST BE APPROVED BY PROJECT MANAGER AND LANDSCAPE ARCHITECT.

### GENERAL SPECIFICATIONS

1.0 STANDARD PANEL HEIGHT: 1200MM
2.0 STANDARD PANEL LENGTH: 2400MM (NOMINAL)
3.0 FENCE POSTS (TYPE 01) : 50X50X1.6MM X 1800MM LONG STEEL RHS (AVG 500MM IN-GROUND AND 100MM ABOVE TOP RAIL WHEN GROUND MOUNTED - 1300MM POSTS WHEN FLANGE MOUNTED).
MATERIAL: PRE-GALVANISED STEEL, HOLLOW RHS TO AS1450:1983 AND AS1397:2001. WELD TYPE: SILICON BRONZE
4.0 FENCE POSTS (TYPE 02) : 100X100X1800MM HWD DAR.
TIMBER FINISH : TWO COATS EXTERIOR WEATHER SHIELD OR APPROVED EQUIVALENT. COLOUR: WAYWARD GREY
- OR -
TIMBER FINISH : TWO COATS CLEAR UV RATED OIL (NIL VARNISH TO BE USED)
5.0 VERTICAL PICKETS Ø19X1.2MM ROUND PICKET PASSING INTO 40X40X1.6MM HORIZONTAL RAILS AT 106 CENTERS.
6.0 FLAT (RHS) TOP & BOTTOM RAIL WITH THE PICKET INSERTED INTO THE TOP RAIL AND FINISHING FLUSH WITH THE UNDERSIDE OF THE BOTTOM RAIL.
7.0 100X38MM HARDWOOD CAPPING ACROSS TOP OF POOL FENCE PANEL TO FRAME . SPANS LENGTHS BETWEEN TYPE TYPE 02 POSTS.

PRODUCT FINISH: POLYESTER POWDER COAT TO AS 4506:2005 METAL FINISHING - THERMOSET POWDER COATINGS. COLOUR: SATIN BLACK
APPROVED PRODUCT: BLUEDOG POOL N PLAY

### INSTALLATION

REFER TO PLANS AND SPECIFICATION RE LOCATION OF IN GROUND INSTALLATION VERSES FLANGE-MOUNTED ON GRADE INSTALLATION.
8.0 IN GROUND INSTALLATION. 500MM DEPTH POST WITHIN CONCRETE FOOTING 20MPA 100MM MINIMUM COVER TO ALL FACES
9.0 COARSE GRAVEL / BLUESTONE TO 100MM DEPTH, ASSIST IS DRAINAGE AND SETTING OF FENCE POSTS (TIMBER POST ONLY)
- OR -
10.0 FLANGE GROUND MOUNTING, REFER TO MANUFACTURERS SPECIFICATIONS, GENERALLY GALVANIZED CHEMSET CS10130 M10 X 130MM
- OR -
11.0 CONCRETE SLEEPER RETAINING WALL AND I-BEAM BRACES
12.0 FENCE POST MOUNT BRACKET TO INSIDE FACE OF I-BEAM.

### AUSTRALIAN STANDARDS (SUMMARY ONLY)

AUSTRALIAN STANDARD AS1926.1
POOL FENCE - HEIGHT: POOL FENCE SHALL BE NOT LESS THAN 1.2M HIGH.
POOL FENCE - NON CLIMBABLE ZONE (NCZ)(NON CLIMBABLE ZONE (NCZ) OF 900MM ON THE OUTSIDE OF THE POOL FENCE ALL THE WAY AROUND
POOL FENCE - VERTICAL GAPS: GAPS BETWEEN VERTICAL MEMBERS OF THE FENCE SHALL NOT BE GREATER THAN 100MM, VERTICAL GAPS IN THE FENCE MUST NOT BE MORE THAN 100MM.
POOL FENCE - GAP AT BOTTOM: GAP AT THE BOTTOM OF THE FENCE MUST BE A MAXIMUM OF 100MM.
POOL FENCE - HORIZONTAL CLIMBABLE MEMBERS: HORIZONTAL MEMBERS SHALL NOT BE WITHIN THE 900MM NON CLIMBABLE ZONE (NCZ) (ON THE OUTSIDE OF THE POOL FENCE).

**PROJECT TITLE**

**CALLI |** SUBDIVISION: STAGE 02

OPERATIONAL WORKS: LANDSCAPE

**DRAWING TITLE**

DETAIL DRAWINGS 02

| REV | DESCRIPTION | DATE | DRAWN | DESIGN | CHECK | APP |
|---|---|---|---|---|---|---|
| B | FOR APPROVAL | 28.08.2024 | MB | MB | MB | JB |
| A | PRELIMINARY ISSUE | 28.08.2024 | SS | MB | MB | JB |

**ISSUE:** FOR APPROVAL

**CLIENT:** HB LAND PTY LTD

**BASE PROVIDED BY:** MORTONS URBAN SOLUTIONS

**MANAGER:** JON BROOKSBY

COPYRIGHT Zone Landscape 2018. This document and the information are solely for the use of the authorised recipient and this document may not be used, copied or reproduced in whole or part for any purpose other than that for which it was supplied by Zone Landscape 2018. Zone Landscape makes no representation, undertakes no duty and accepts no responsibility to any third party who may use or rely upon this document or the information.

zone Landscape Architecture

**ZONE LANDSCAPE ARCHITECTURE**

**GOLD COAST**
1638 Tweed Street, Burleigh Heads QLD 4220
PO Box 3805, Burleigh Town QLD 4220

**GLADSTONE**
2/172 Goondoon St, Gladstone, QLD 4680
PO Box 5332, Gladstone QLD 4680

zonelandscape.com.au | 07 55622303

**JOB / DRAWING NO:** L23108 - 301

**SHEET NO.** 11 OF 12

DRAFT

## 1.0 BEFORE WE GET GOING

### 1.1 FAMILIARAISE YOURSELF WITH PLANS, SITE AND SCOPE

IT IS THE RESPONSIBILITY OF THE LANDSCAPE CONTRACTOR TO FAMILIARISE THEMSELVES WITH THE SUBJECT SITE TO SATISFY THEMSELVES AS TO LOCAL CONDITIONS, ACCESSIBILITY, STORAGE SPACE, THE FULL EXTENT AND SCOPE OF THE WORKS, THE NATURE OF THE GROUND AND THE FULL GAMUT OF THE SCOPE OF WORKS GENERALLY. NO CLAIM WILL BE ALLOWED FOR ANY ALLEGED INADEQUACY OF THE DESCRIPTION WITHIN THIS CONSTRUCTION DOCUMENTATION. SITE VISITS MAY BE MADE BY ARRANGEMENT WITH THE SUPERVISING OFFICER.

IF, IN THE UNFORTUNATE EVENT THERE ARE CONFLICTS BETWEEN TYPICAL DETAILS, SPECIFICATIONS, PLAN NOTES AND OR ASSOCIATED PROJECT BOQ, PLEASE CONTACT THE LANDSCAPE ARCHITECT TO SEEK CLARIFICATION. PLEASE DO NOTE MAKE ANY ASSUMPTIONS IN THIS REGARD ... IF IN DOUBT, PLEASE ASK.

THE LANDSCAPE SUBCONTRACTOR WILL BE RESPONSIBLE FOR THE CONSTRUCTION OF ALL OF THE HARD AND SOFTSCAPE WORKS AS DETAILED WITHIN THIS PLAN SET UNLESS NOTED OTHERWISE.

A COPY OF THE DECISION NOTICE AND A SET OF STAMPED APPROVED PLANS ARE KEPT ON SITE AT ALL TIMES. VERIFY LOCATION OF ALL SERVICES PRIOR TO COMMENCEMENT OF WORKS.

### 1.2 FAMILIARAISE YOURSELF EXISTING & PROPOSED SERVICES

IT IS THE RESPONSIBILITY OF THE LANDSCAPE CONTRACTOR TO VERIFY LOCATION OF ALL SERVICES PRIOR TO COMMENCEMENT OF WORKS.

CIVIL, STRUCTURAL, ELECTRICAL AND HYDRAULIC WORKS INFORMATION AND LOCATIONS OF EXISTING INFRASTRUCTURE CONTAINED WITHIN THIS DOCUMENT ARE TO BE CONSIDERED INDICATIVE ONLY. IT IS THE RESPONSIBILITY OF THE LANDSCAPE CONTRACTOR TO LIAISE WITH THESE DISCIPLINES AS REQUIRED AND TO REVIEW EACH DISCIPLINE'S 'FOR CONSTRUCTION' PLANS TO CROSS REFERENCE EACH LOCATION WHERE THEY INTEND TO COMPLETE WORKS (THESE WILL BE KEPT WITHIN THE PROJECT OFFICE OR SITE SHED AT ALL TIMES).

A NUMBER OF EXISTING UNDERGROUND SERVICES MAY ALSO BE PRESENT ON THE SITE. THE POSITION OF SUCH SERVICES WILL BE INDICATED ON DRAWINGS PROVIDED BY THE SUPERINTENDENT. THE LANDSCAPE SUBCONTRACTOR MUST ALLOW FOR ALL NECESSARY PRECAUTIONS DURING EXCAVATIONS OR OTHER OPERATIONS TO AVOID DAMAGE TO SERVICES.

THE LANDSCAPE SUBCONTRACTOR SHALL PROTECT EXISTING SERVICES AND SHALL BE HELD RESPONSIBLE FOR ENSURING THAT NO DAMAGE IS CAUSED TO ANY EXISTING PIPES, DUCTS, SEWERS, GAS, WATER AND ELECTRICITY SERVICES MAINS OR INSTALLATIONS, TELEPHONE CABLES AND OVERHEAD CABLES. ANY SUCH DAMAGE SHALL BE REPORTED IMMEDIATELY AND THE NECESSARY REPAIRS CARRIED OUT AT THE LANDSCAPE SUBCONTRACTOR'S EXPENSE.

### 1.3 FIRE ANTS & MYRTLE RUST

THESE ARE TWO COMMON ISSUES THAT THE LANDSCAPE CONTRACTOR MUST REMAIN AWARE OF. THE LANDSCAPE SUBCONTRACTOR IS TO CARRY OUT ALL NECESSARY MEASURES, INSPECTIONS AND SAFEGUARDS TO ENSURE FIRE ANTS AND MYRTLE RUST DO NOT ENTER THE SITE VIA EQUIPMENT, MACHINERY, MATERIALS AND PLANT STOCK. CONTACT THE SITE SUPERVISOR OR LANDSCAPE ARCHITECT IMMEDIATELY IN THE EVENT THAT FIRE ANT, MYRTLE RUST IS IDENTIFIED TO ENSURE BEST PRACTICE SOLUTIONS ARE IMPLEMENTED AND THE RELEVANT AUTHORITIES ARE NOTIFIED.

### 1.4 BEST PRACTICE AT ALL TIMES

UNLESS OTHERWISE SPECIFIED OR INDICATED IN THE TENDER DRAWINGS, THE GENERAL LANDSCAPING OPERATIONS SHALL BE EXECUTED IN ACCORDANCE WITH ALL CURRENT RELEVANT AUSTRALIAN STANDARDS.

THE LANDSCAPE SUBCONTRACTOR SHALL FAMILIARISE HIMSELF AND HIS OPERATIVES WITH THE RELEVANT AUSTRALIAN STANDARDS REFERRED TO IN THIS SPECIFICATION AND ANY SUBSEQUENT REVISIONS THEREOF.

WHERE AND TO THE EXTENT THAT MATERIALS, PRODUCTS AND WORKMANSHIP ARE NOT FULLY DETAILED OR SPECIFIED THEY ARE TO BE OF A STANDARD APPROPRIATE TO THE WORKS AND SUITABLE FOR THE PURPOSES STATED IN OR REASONABLY TO BE INFERRED FROM THE PROJECT DOCUMENTS. IN ACCORDANCE WITH BEST PRACTICE LANDSCAPE/HORTICULTURAL PRACTICE.

AGAIN... IF THERE IS ANY DOUBT PLEASE ASK

### 1.5 KEEP THINGS TIDY

LANDSCAPE CONTRACT TO ENSURE THAT DELIVERY OF AND CONVEYANCE OF MATERIALS (SOILS, EARTH, SAND, GRAVELS, CONCRETE AND LOOSE DEBRIS) THROUGH THE SITE IS DONE SO IN A MANNER THAT WILL PREVENT DROPPING OF MATERIALS ON STREETS, PUBLIC AND PRIVATE AREAS. COVER ALL LOADS TO ENSURE NO LOSS OF LOAD OR DUST. ENSURE THAT THE WHEELS, TRACKS AND BODY SURFACES OF ALL VEHICLES AND PLANT LEAVING THE SITE ARE FREE OF MUD AND THAT MUD IS NOT CARRIED ONTO ADJACENT PAVED STREETS OR OTHER AREAS. A TIDY SITE IS A HAPPY SITE.

### 1.6 DON'T INHERIT POOR SITE WORKS

BEFORE STARTING EACH NEW TYPE OF SECTION OF WORK, ENSURE THAT PREVIOUS, RELATED WORK IS APPROPRIATELY COMPLETE, IN ACCORDANCE WITH THE PROJECT DOCUMENTS, TO A SUITABLE STANDARD AND IN A SUITABLE CONDITION TO RECEIVE THE NEW LANDSCAPE WORK. NIL VARIATIONS ETC WILL BE CONSIDERED IF ISSUES ARISE FROM ADDITIONAL WORKS BEING REQUIRED TO RECTIFY FAULTS OF OTHER DISCIPLINE'S WORKS.

IF REQUIRED, REMOVE ANY SURPLUS MATERIALS, SPOIL, RUBBISH AND LITTER FROM LANDSCAPE AREAS AS WORK PROGRESSES.

LEAVE SITE IN A CLEAN AND TIDY CONDITION, WITH SOIL/MULCH SWEPT OFF HARD SURFACES AT THE END OF EACH AND EVERY WORKING DAY.

### 1.7 DELIVERY QUALITY WORKS

OPERATIVES MUST BE APPROPRIATELY SKILLED AND EXPERIENCED AND BE FAMILIAR WITH THE TERMS OF THE SPECIFICATION.

INSPECT PRODUCTS/MATERIALS/STOCK CAREFULLY BEFORE USE AND REJECT ANY WHICH ARE DEFECTIVE.

USE PRODUCTS/MATERIALS ONLY IN THE METHOD AND FOR THE PURPOSE RECOMMENDED BY THE MANUFACTURER.

ENSURE APPROPRIATE QUANTITIES ARE UTILIZED; PROVIDE ADEQUATE MEASURES FOR MIXING AND SPREADING OF ALL PRODUCTS OR MATERIALS.

SET OUT COMPONENTS OR STOCK TO ENSURE CORRECT POSITIONING AND SPACING'S ARE ACHIEVED.

PROTECT FINISHED WORK FROM SUBSEQUENT OPERATIONS AND INTERFERENCE BY OTHERS AS PROJECT PROGRESSES.

LANDSCAPE FOREMAN TO SUPERVISE THE WHOLE OF THE LANDSCAPE WORKS AND BE FAMILIAR WITH ALL LANDSCAPE WORKS AND SCHEDULING OF SCOPE.

### 1.8 TESTING

THE SUPERINTENDENT MAY REQUIRE MATERIALS, GOODS, WORK OR SAMPLES THEREOF TO BE TESTED TO ENSURE THAT THEY COMPLY WITH THE STANDARDS SPECIFIED. IF THESE TESTS INDICATE THAT THE REQUIRED STANDARDS HAVE NOT BEEN ACHIEVED, THE COSTS OF TESTING AND ANY SUBSEQUENT RE-TESTING ARE TO BE BORNE BY THE LANDSCAPE SUBCONTRACTOR.

## 2.0 THE WORKS

THE LANDSCAPE SUBCONTRACTOR WILL BE RESPONSIBLE FOR THE CONSTRUCTION OF ALL OF THE HARD AND SOFTSCAPE WORKS AS DETAILED WITHIN THIS PLAN SET UNLESS NOTED OTHERWISE.

### 2.1 SETOUT

LANDSCAPE CONTRACTOR TO FAMILIARISE THEMSELVES WITH ALL PLANS AND SETOUT WORKS FOR EACH PORTION OF WORKS WITH REFERENCE TO ALL RELEVANT DICIPLINE'S PLANS AND SPECIFICATIONS, NOTING ANY PROPOSED AND OR EXISTING SERVICES. CHECK THE LEVELS AND DIMENSIONS OF THE SITE AGAINST THOSE SHOWN ON THE DRAWINGS AND RECORD THE RESULTS (AND ANY DISCREPANCIES) ON A COPY OF THE DRAWINGS.

NOTIFY THE SUPERINTENDENT IN WRITING OF ANY DISCREPANCIES AND OBTAIN INSTRUCTIONS BEFORE PROCEEDING.

INFORM SUPERINTENDENT WHEN OVERALL SETTING OUT IS COMPLETE AND BEFORE COMMENCING OPERATIONS.

### 2.2 SOFTWORKS

SOFTSCAPE WORKS CAN GENERALLY BE SUMMARISED AS COMPRISING THE FOLLOWING:

A. SUB-GRADES CULTIVATED OR PREPARED FOR PLACING TOPSOIL.

B. SUBSOIL DRAINAGE BEFORE TOPSOIL PLACEMENT.

C. TOPSOIL SPREAD BEFORE PLANTING.

D. GRASSING BED PREPARED BEFORE TURFING, SEEDING, OR TEMPORARY GRASSING.

E. PLANT HOLES EXCAVATED AND PREPARED FOR PLANTING PALMS AND LARGE TREES.

F. PLANT SUPPLY SITE DELIVERY AND AGREEMENT OF THEIR PROJECT ACCEPTABILITY (NAMELY PALMS AND LARGE TREES).

G. PLANT MATERIAL SET OUT BEFORE PLANTING.

H. PLANTING, STAKING AND GUYING COMPLETED.

I. GRASSING AREAS COMPLETED.

J. COMPLETION OF PLANTING WORKS AND PLANTING ESTABLISHMENT & MAINTENANCE WORK.

### 2.3 PLANTING AREAS: INSTALLATION

THERE ARE TWO PRIMARY AREAS THAT WILL RECEIVE SOFTSCAPE PLANTING, THESE ARE 1) AREAS ON NATURAL GROUND (DEEP PLANTING) AND 2) PLANTING WITHIN RAISED PLANTING BEDS OR PODIUMS. THE FOLLOWING PREPARATION NOTES ARE APPLICABLE TO BOTH HOWEVER REFERENCE TO CONSOLIDATION OF SUBGRADE ETC ARE RELEVANT ONLY TO DEEP PLANTING / GENERAL GARDEN BED AREAS ONLY. PODIUM PLANTING BEDS WILL BE SUBJECT TO DRAINAGE WORKS, AND WILL RECEIVE 100% IMPORTED OR IMPROVED SITE SOIL.

#### 2.3.1 GENERAL PLANTING BED AREAS

A. PREPARE PLANTING AREA TO ENSURE APPROPRIATE DEPTH IS ACHIEVED TO RECEIVE SOIL PROFILE AS SPECIFIED: 300MM SOIL IMPORT TO AS4419, AND 100MM MULCH (IE 400MM DEPTH AVG TO PLANTING BEDS TO BE PREPPED PRIOR TO GROWING MEDIUM PROFILE INSTALLATION).

B. CULTIVATE THE SUBGRADE TO 100MM IN DEPTH FOR GENERAL SUBSOIL AND 150MM FOR HEAVY CLAY SOILS AND REMOVE ANY STONE OR ROCK EXCEEDING 50MM IN DIAMETER AS WELL AS ANY ORGANIC MATERIAL SUCH AS ROOTS STICK CLODS OR WEEDS (BROUGHT IN THROUGH EXCAVATION PROCESS). IN GENERAL, REMOVE ANY ALL MATERIAL OR DEBRIS THAT WOULD BE DETRIMENTAL TO PLANT HEALTH.

C. INSTALL SOIL IMPORTED GROWING MEDIUM: SOIL MIXTURE THAT IS BROUGHT ONTO SITE FROM AN APPROVED AND ACCREDITED GROWING MEDIA SUPPLIER AND ADHERE TO ALL RELEVANT AUSTRALIAN STANDARDS AS4419. INSTALL SOIL TO A DEPTH OF 300MM AS PER TYPICAL DETAIL THIS DOCUMENT.

C. INSTALL MULCH AS SPECIFIED TO A DEPTH OF 100MM. ENSURE MULCH IS PLACED MINIMUM 500MM FROM PLANT STEMS. MULCH SHOULD BE PROFILED GENERALLY AS ILLUSTRATED TO CREATE A 'WELL' AROUND THE PLANT STOCK TO PROMOTE WATER RETENTION. ENSURE PLANTS ARE PLACED AS PER SPECIFIED DENSITIES AT EVEN SPACINGS TO ACHIEVE DENSITIES AS STATED. REFER TO MULCH SPECIFICATION THIS DOCUMENT.

D. INSTALL PLANTING WORKS: PLANT TYPE, SIZE, DENSITIES AND LOCATION AS SPECIFIED ON PLANS AND PLANTING SCHEDULES. REFER TO PLANTING QUALITY STANDARDS AS SPECIFIED.

E. ENSURE MINIMUM OFFSET OF 500MM FROM ANY PATHWAYS, FENCE LINES, FOOTINGS ETC OR AS SPECIFIED IN THIS DOCUMENT

F. INSTALL SLOW RELEASE FERTALISER IN LINE WITH BEST PRACTICE OR AS SPECIFIED IN THIS DOCUMENT.

#### 2.3.2 STREET TREE PLANTING WORKS

A. EXCAVATE HOLE TO MINIMUM 2X WIDTH AND 2X DEPTH OF ROOTBALL.

B. CULTIVATE THE SURROUNDING SUBGRADE TO 200MM IN DEPTH AND REMOVE ANY STONE OR ROCK EXCEEDING 50MM IN DIAMETER AS WELL AS ANY ORGANIC MATERIAL SUCH AS ROOTS STICK CLODS OR WEEDS (BROUGHT IN THROUGH EXCAVATION PROCESS). IN GENERAL, REMOVE ANY ALL MATERIAL OR DEBRIS THAT WOULD BE DETRIMENTAL TO PLANT HEALTH.

HOLD POINT: A TREE HOLE INSPECTION WILL BE REQUIRED PRIOR TO INSTALL OF TREES UNLESS STATED OTHERWISE. ENSURE LIAISON WITH PROJECT MANAGER OR LANDSCAPE SUPERINTENDENT / ARCHITECT PRIOR TO PROCEEDING WITH PLANTING WORKS.

C. INSTALL PLANTING WORKS: TREE TYPE, SIZE AND LOCATION AS SPECIFIED ON PLANS AND PLANTING SCHEDULES.

D. BACKFILL TREE HOLE WITH SOIL AS SPECIFIED. SOIL SHALL COMPLY WITH AS4419-2003 - INSTALL SLOW RELEASE FERTALISER IN LINE WITH BEST PRACTICE OR AS SPECIFIED IN THIS DOCUMENT.

E. INSTALL MULCH COLLAR. THIS IS TYPICALLY TO BE MINIMUM 500MM RADIUS UNLESS OTHERWISE STATED ON PLANS AND IS TO BE AT A DEPTH OF 100MM. ENSURE MULCH IS PLACED MINIMUM 100MM FROM TREE STEM TO PREVENT COLLAR ROT. MULCH SHOULD BE PROFILED GENERALLY AS ILLUSTRATED TO CREATE A 'WELL' AROUND THE TREE TO PROMOTE WATER RETENTION. REFER TO MULCH SPECIFICATION THIS DOCUMENT.

F. STAKE TREES AS SPECIFIED: STAKES TO BE 1800 X 50 X 50MM WITH 600MM INTO GROUND ENSURING 1200MM REMAINS ABOVE GROUND. ENSURE STAKES ARE CLEAR OF ROOT BALL.

G. TIE TREE TO STAKES WITH 50MM HESSIAN OR RUBBERISED BLACK PVC IN A FIGURE OF EIGHT. ENSURE NURSERY STAKES ARE REMOVED.

H. INSTALL ROOT GUARD TO DEPTH 1200MM. REFER TO SPECIFICATION FOR TYPE. AS PER DETAIL, ROOT GUARDS ARE TYPICALLY PLACED TO REAR OF KERB HOWEVER MAY BE SPECIFIED TO ADDITIONAL AREAS AS DETERMINED BY PROXIMITY TO SERVICES ETC. REFER TO TO SETOUT PLAN FOR CONFIRMATION OF LOCATION.

### 2.4 STREET TREE ADDITIONAL REQUIREMENTS

IMPORTANT: TREES ARE TO ABIDE BY RELEVANT COUNCIL TREE STOCK REQUIREMENT STANDARDS. THESE STANDARDS WILL BE REVIEWED AT FORMAL TREE HOLE INSPECTION WITH COUNCIL ASSESSING OFFICER. THESE ARE DETAILED WITHIN THE ASSOCIATED SPECIFICATIONS AND CAN GENERALLY BE SUMMARISED AS:

ALL TREES HOLES MARKED OUT IN ACCORDANCE WITH APPROVAL AND COMPLY WITH ALL COUNCIL STANDARD OFFSETS

TREE HOLE DIMENSIONS AND PREPARATION PARAMETERS ARE AS PER THOSE STATED ABOVE

TREE HOLES DO NOT IMPACT ON SERVICES OR OTHER INFRASTRUCTURE

ALL TREES ARE AS PER NATSPEC SPECIFICATIONS INCLUDING CORRECT FORM AND STRUCTURE,

STREET TREES AND FEATURE TREES TO HAVE A MINIMUM 900MM TREE TRUNK AND BE 2000MM IN HEIGHT AT TIME OF PLANTING

STREET TREE LOCATION SUBJECT TO CHANGE BASED ON DRIVEWAY AND SERVICES LOCATIONS.

GENERAL ALLOWANCE OF 1 TREE PER LOT.

LOCATIONS TO BE VERIFIED BY COUNCIL AND LANDSCAPE ARCHITECT AT TREE HOLE INSPECTION

A. TREES TO BE PLANTED MINIMUM 1 METER TO REAR OF NKL

B. TREES ARE NOT TO BE PLANTED WITHIN:

C. 3M OF RESIDENTIAL ACCESSES

D. A MINIMUM OF 15 METERS OF THE APPROACH SIDE OF ANY STREET INTERSECTION TO MAINTAIN SIGHT LINES - 6 METERS OF DEPARTURE

E. 6 METERS OF A DEPARTURE SIDE OF A PEDESTRIAN CROSSING, BUS STOP SIGN OR SHELTER TO MAINTAIN SIGHT LINES

F. 3M TO EITHER SIDE OF A FOOTPATH CROSSOVER INCLUDING BIKEWAYS AND PATHS

G. 2.5 METERS OF ELECTRICITY / TELEPHONE POLES

H. MINIMUM 2 METERS FROM SERVICES

I. MINIMUM 7 METERS FROM STREET LIGHTS

J. MINIMUM 4 METERS FROM HIGH VOLTAGE TRANSMISSION LINES

K. 4.5 METERS FROM A MAJOR VEHICULAR ACCESS CROSSING

L. 3 METERS FROM A FIRE HYDRANT

### 2.5 TURF AREAS: INSTALLATION

OBTAIN TURF FROM A SPECIALIST GROWER OF CULTIVATED TURF. AREAS DESIGNATED AS "TURF" ON DRAWINGS SHALL BE FRESHLY CUT AND OF THE FOLLOWING SPECIFICATION: GRADE A COUCH.

TURF TO BE FREE FROM NUTGRASS OR OTHER NOXIOUS WEEDS OR ANY OTHER MATERIAL DELETERIOUS TO PLANT GROWTH.

DELIVER THE TURF WITHIN 24 HOURS OF CUTTING, AND LAY IT WITHIN 36 HOURS OF CUTTING. PREVENT IT FROM DRYING OUT BETWEEN CUTTING AND LAYING.

PREPARE TURF AREAS 100MM BELOW DESIGNED FINISH LEVEL TO ALLOW 75MM SOIL UNDERLAY AND 25MM ROLL TURF.

CULTIVATE THE SURROUNDING SUBGRADE TO A FURTHER 100MM IN DEPTH AND REMOVE ANY STONE OR ROCK EXCEEDING 50MM IN DIAMETER AS WELL AS ANY ORGANIC MATERIAL SUCH AS ROOTS STICK CLODS OR WEEDS (BROUGHT IN THROUGH EXCAVATION PROCESS). IN GENERAL, REMOVE ANY ALL MATERIAL OR DEBRIS THAT WOULD BE DETRIMENTAL TO TURF HEALTH.

SUBGRADE TO BE EVALUATED ON SITE TO ASSESS PERMEABILITY AND GENERAL TYPE TO EVALUATE REQUIREMENT FOR ADDITIONAL DRAINAGE WORKS AND OR CULTIVATION WORKS TO ENSURE NIL ADVERSE IMPACTS ON TURF HEALTH.

INSTALL TURF UNDERLAY AT DEPTH OF 75MM. TURF UNDERLAY TO BE AS BE SOIL IMPORT SPECIFICATION UNLESS STATED OTHERWISE.

BEFORE LAYING TURF, APPLY FERTILISER OF 14:15:10 N.P.K. OR APPROVED SIMILAR COMPOSITION AT THE RATE OF 100G PER M.2 AND RAKE INTO THE PREPARED SOIL.

LAY THE TURF IN STRETCHER PATTERN WITH THE JOINTS STAGGERED AND CLOSE BUTTED. LAY PARALLEL WITH THE LONG SIDES OF LEVEL AREAS, AND WITH CONTOURS ON SLOPES. CLOSE BUTT THE END JOINTS AND SPACE THE STRIPS 300 MM APART. APPLY A LAYER OF TOP DRESSING BETWEEN THE STRIPS OF TURF. FINISH WITH AN EVEN SURFACE. LIGHTLY TAMP TO AN EVEN SURFACE IMMEDIATELY AFTER LAYING.

WATER IMMEDIATELY AFTER LAYING UNTIL THE TOPSOIL IS MOISTENED TO ITS FULL DEPTH. CONTINUE WATERING TO MAINTAIN MOISTURE TO THIS DEPTH. KEEP THE GRASS IN A HEALTHY WEED FREE CONDITION. REFER SECTION 12.10.3 FOR WATERING REGIME.

MOW TO MAINTAIN THE GRASS HEIGHT WITHIN THE REQUIRED RANGE. DO NOT REMOVE MORE THAN ONE THIRD OF THE GRASS HEIGHT AT ANY ONE TIME. CARRY OUT THE LAST MOWING WITHIN 7 DAYS BEFORE THE END OF THE PLANTING ESTABLISHMENT PERIOD. REMOVE GRASS CLIPPINGS FROM THE SITE AFTER EACH MOWING.

WHEN THE TURF IS ESTABLISHED, MOW CLOSELY, REMOVE CUTTINGS AND LIGHTLY TOP DRESS TO A DEPTH OF 10MM WITH AN APPROVED TOP DRESS SOIL. WORK THE DRESSING WELL INTO THE JOINTS AND CORRECT ANY UNEVENNESS IN THE TURF SURFACE.

### 2.6 TURF AREAS: INSTALLATION (ARTIFICIAL)

ARTIFICIAL TURF TO BE INSTALLED AS PER MANUFACTURERS SPECIFICATIONS. DIRECT STICK DOWN PERMITTED IN INSTANCES WHERE CONCRETE PAD HEIGHT IS AT APPROVED FFL, IDENTIFY ANY CONFLICTS WITH MANUFACTURERS RECOMMENDATIONS AND ASSOCIATED WARRANTIES IF DIRECT STICK IS PROPOSED. IN INSTANCES WHERE SUBGRADE IS TO BE INSTALLED, THIS IS TO BE AS PER MANUFACTURERS RECOMMENDATIONS, GENERALLY DESCRIBED AS COMPACTED CRUSHER DUST (FINELY GRADED CRUSHED BLUE STONE) OR ROAD BASE.

### 2.7 DRAINAGE

THE LANDSCAPE SUBCONTRACTOR IS TO PROVIDE FOR SUFFICIENT SURFACE AND SUB-SURFACE DRAINAGE TO GARDEN AND GRASS AREAS TO ENSURE ADEQUATELY DRAINED SOFT LANDSCAPED AREAS FREE FROM SURFACE PONDING WATER AND HEAVY / WATERLOGGED SOILS. SURFACE AND SUB-SURFACE DRAINAGE IS TO AID IN THE HEALTHY GROWTH AND CONTINUED THRIVING OF ALL PLANT STOCK AND GRASS AREAS.

COMPLY WITH THE RELEVANT AUSTRALIAN STANDARDS TO THE EXTENT THAT THEY ARE RELEVANT AND NOT OVER-RIDDEN BY THE SPECIFICATION.

SURFACE DRAINAGE

WHEN SETTING OUT LINES AND LEVELS OF GARDENS AND TURFED AREAS, ENSURE THE ACCURATE FORMATION OF GRADES AND CROSS FALLS LEADING TO SURFACE CATCH DRAINS AND FIELD INLETS, SO ENABLING THE AREAS TO DRY QUICKLY AND SURPLUS WATER TO REACH THE DRAINAGE SYSTEM IN SUCH A WAY THAT POTENTIAL EROSION CHANNELS AND/OR WET SPOTS ARE AVOIDED.

MINIMUM SURFACE CROSS FALLS TOWARDS DRAINS AND OUTFALLS UNLESS OTHERWISE STATED SHALL BE AS FOLLOWS:

MULCHED GARDEN AREAS 1:40

TURFED AREAS 1:80

## 3.0 MATERIAL SPECIFICATIONS

### 3.1 IMPORTED SOILS

UNLESS SPECIFIED OTHERWISE OR AGREED TO BY THE LANDSCAPE ARCHITECT AND PROJECT SUPERVISOR, ALL SOIL IN GENERAL PLANTING WORKS IS TO BE IMPORTED PREMIUM GRADE TOPSOIL FOR ALL NEW PLANTING AREAS TO COMPLY WITH AS 4419 (1998).

### 3.2 IMPROVED SITE SOIL

IN THE EVENT THAT IMPROVED SITE SOIL HAS BEEN SPECIFIED OR DETERMINED FOR USE WITHIN ALL OR ANY LANDSCAPE WORKS THIS MUST BE TESTED, IMPROVED IN LINE WITH RELEVANT AUSTRALIAN STANDARDS AND INDUSTRY BEST PRACTICE METHODOLOGY.

### 3.3 MULCH

PROVIDE MULCH WHICH IS FREE OF DELETERIOUS AND EXTRANEOUS MATTER SUCH AS SOIL, WEEDS AND STICKS TO AS 4454.

ORGANIC MULCH: MULCH TO BE FOREST FINES ORGANIC MULCH 15MM CHIP.

MATERIAL NOT PERMITTED: LEAF AND PLANT MATTER FROM ANY OTHER SPECIES (ESPECIALLY WEED SPECIES SUCH AS PRIVET, CAMPHOR LAUREL, CORAL TREE, POPLAR, WILLOW, PINE AND OTHER NOXIOUS WEEDS). NIL TIP MULCH AT ANY TIME TO BE USED.

DECORATIVE MULCH - ECO OUTDOOR PEBBLE 'ANVIL' 50-70MM @ 50MM DEPTH

### 3.4 TURF

OBTAIN TURF FROM A SPECIALIST GROWER OF CULTIVATED TURF.

AREAS DESIGNATED AS "TURF" ON DRAWINGS SHALL BE FRESHLY CUT AND OF THE FOLLOWING SPECIFICATION: GRADE A COUCH

TURF TO BE FREE FROM NUTGRASS OR OTHER NOXIOUS WEEDS OR ANY OTHER MATERIAL DELETERIOUS TO PLANT GROWTH.

DELIVER THE TURF WITHIN 24 HOURS OF CUTTING, AND LAY IT WITHIN 36 HOURS OF CUTTING. PREVENT IT FROM DRYING OUT BETWEEN CUTTING AND LAYING.

#### 3.4.1 ARTIFICIAL TURF

URBAN TURF SOLUTIONS OR SIMILAR APPROVED TO MANUFACTURERS RECOMMENDATION

### 3.5 PLANTS

PLANT MATERIAL QUALITY SPECIFICATION - NURSERY STOCK

ALL PLANTS SHALL BE TRUE TO SCHEDULED NOMENCLATURE, WELL FORMED, HARDENED OFF AND DISEASE-FREE NURSERY STOCK. THEY SHALL BE CONTAINER GROWN IN POTTING SOIL WITH ROOT SYSTEM FIRMLY ESTABLISHED BUT WITH NO LARGE ROOTS GROWING OUT OF THE CONTAINER. NO PLANT SHALL BE POT BOUND.

ALL TREES SUPPLIED SHALL COMPLY WITH NATSPEC'S "SPECIFYING TREES: A GUIDE TO ASSESSMENT OF TREE QUALITY"

THE CONDITION OF PLANT STOCK SHALL BE SUCH THAT FUTURE GROWTH SHALL BE STRONG AND TYPICAL OF THE SPECIES. STOCK THAT SHOWS SIGNS OF LATENT CONDITIONS EVIDENT OF DEFECTIVE NURSERY PRACTICES (SUCH AS 'SPIRALING') SHALL BE DEEMED UNACCEPTABLE.

ALL PLANTS SHALL BE GROWN IN ACCORDANCE WITH NURSERY ASSOCIATION STANDARDS. CORRECT NURSERY / GROWING PRACTICES SHALL HELP TO ENSURE THE LONG-TERM HEALTH AND VIABILITY OF THE PLANT STOCK ON SITE AFTER PLANTING.

ENSURE THAT TRUNKS AND BRANCHES ARE FREE OF DIEBACK, CAVITIES, SUNBURN AND SECRETIONS. TRUNK AND BRANCHES ARE TO BE EVENLY TAPERED AND TEXTURED TYPICAL OF THE SPECIE. PLANT MATERIAL IS TO BE MATURED ENOUGH TO SUPPORT THEMSELVES WITHOUT STAKING. BRANCHES SHOULD BE EVENLY DISTRIBUTED, EXHIBIT A FULL WELL-FORMED CANOPY THAT OCCUPIES A MINIMUM 1/3 OF THE OVERALL CURRENT HEIGHT. SPECIMENS ARE TO BE PREPARED FOR THEIR INTENDED PURPOSE.

FOLIAGE SHALL BE EVENLY DISTRIBUTED ACROSS THE CROWN IN PROPORTION TO THE BRANCHING STRUCTURE AS WELL AS BE OF A TRUE COLOUR TYPICAL OF THE SPECIE, DENSE AND OF GOOD SIZE. ENSURE FOLIAGE IS FREE OF DEFICIENCIES AND BURN.

AT THE TIME OF THE LAST PLANT STOCK REVIEW PRIOR TO SITE DELIVERY, PLANT MATERIAL IS TO CONFORM WITH THE SPECIFIED MINIMUM PLANT SIZES IN THE PLANT SCHEDULE. PLANTS SHALL NOT EXHIBIT SIGNS OF HAVING BEEN STRESSED AT ANY STAGE DURING THEIR DEVELOPMENT DUE TO INADEQUATE WATERING, EXCESSIVE SHADE/SUNLIGHT, SUFFERED PHYSICAL DAMAGE OR HAVE RESTRICTED HABIT DUE TO GROWTH IN NURSERY ROWS.

ALL TREES ARE AS PER NATSPEC SPECIFICATIONS INCLUDING CORRECT FORM AND STRUCTURE,

STREET TREES AND FEATURE TREES TO HAVE A MINIMUM 900MM TREE TRUNK AND BE 2000MM IN HEIGHT AT TIME OF PLANTING

THE SUPERINTENDENT HAS THE RIGHT TO REJECT ANY PLANTS NOT MEETING THE REQUIREMENTS OF THE SPECIFICATION AND SCHEDULE.

STORE PLANTS SO THEY OF THEIR CONTAINERS WILL NOT BE DAMAGED. WATER AND MAINTAIN ALL PLANTS AS NECESSARY. PROVIDE ALL LIFTING EQUIPMENT FOR STOCK DELIVERED TO SITE. INSPECT STOCK WITH THE SUPERINTENDENT AND THE CONTRACT SUPPLIER ONCE THE STOCK HAS ARRIVED ON SITE PRIOR TO UNLOADING.

PROTECTION: PREVENT PLANT STOCK FROM DAMAGE. INSPECT ALL STOCK FOR DISEASE AND PESTS. REPORT ON RECOVERY SUCCESS AND GIVE NOTICE OF SITE PLANT STOCK, WHICH WILL NOT RECOVER FROM RELOCATION.

REPLACEMENT: REPLACE DAMAGED OR FAILED PLANTS WITH PLANTS OF THE SAME TYPE AND SIZE.

### 3.6 FERTILISER

PROVIDE PROPRIETARY FERTILISERS, DELIVERED TO THE SITE IN SEALED BAGS MARKED TO SHOW MANUFACTURER OR VENDOR, WEIGHT, FERTILISER TYPE, N:P:K RATIO, RECOMMENDED USES AND APPLICATION RATES. STORE IN A DRY SECURE ENVIRONMENT. APPLY ACCORDING TO MANUFACTURER'S RECOMMENDATIONS (RATE/REAPPLICATION/WATERING).

A. GARDEN BEDS SLOW RELEASE

OSMOCOTE OR SIMILAR APPROVED TO MANUFACTURERS RECOMMENDATION

B. TREE PLANTINGS

OSMOCOTE OR SIMILAR APPROVED TO MANUFACTURERS RECOMMENDATION

C. GRASSING

GROWFORCE 301 OR SIMILAR APPROVED 100KG/HA

### 3.7 STAKES & TIES

A. STAKES

MATERIAL: HARDWOOD, STRAIGHT, FREE FROM KNOTS OR TWISTS, POINTED AT ONE END.

INSTALLATION: DRIVE STAKES INTO THE GROUND AT LEAST ONE THIRD OF THEIR LENGTH, AVOIDING DAMAGE TO THE ROOT SYSTEM.

STAKE SIZES:

FOR PLANTS > 2.5 M HIGH: THREE 50 X 50 X 2400 MM STAKES PER PLANT.

FOR PLANTS 1 - 2.5 M HIGH: TWO 50 X 50 X 1800 MM STAKES PER PLANT.

FOR PLANTS < 1 M HIGH: ONE 38 X 38 X 1200 MM STAKE PER PLANT.

B. TIES

TIES SHALL BE 50MM WIDE HESSIAN WEBBING OR 25MM WIDE HEAVY -DUTY POLYTHENE STRIPS. (PLASTIC COATED TIES ARE NOT ACCEPTABLE). FIX TIES IN A FIGURE OF EIGHT PATTERN AND STAPLE TO STAKE WITH GALVANISED WIRE STAPLES. IN CASES WHERE STRONG TIES ARE REQUIRED PAST THE MAINTENANCE PERIOD, 50MM UV STABILISED WOVEN POLYPROPYLENE TIES SHOULD BE USED.

## 4.0 MAINTENANCE

### 4.1 CERTIFICATION AND WARRANTIES

LANDSCAPE CONTRACTOR TO PROVIDE ALL RELEVANT MAINTENANCE LOGS, CERTIFICATION DOCUMENTS (PLAYGROUND WARRANTIES, CERTIFICATIONS, SPARE PARTS MANUALS, FORM 16 ETC) MANUFACTURERS WARRANTIES, SOIL CERTIFICATIONS, FIRE ANT CERTIFICATION TO THE LANDSCAPE ARCHITECT FOR INCLUSION IN AS CONSTRUCTED DOCUMENTATION. THIS IS REQUIRED AT MINIMUM 2 MONTHS PRIOR TO ON MAINTENANCE INSPECTION. KEEP A LOGBOOK RECORDING ACCORDING TO WEEKLY CYCLES WHEN AND WHAT MAINTENANCE WORK HAS BEEN DONE AND WHAT MATERIALS, INCLUDING TOXIC MATERIALS, HAVE BEEN USED. MAKE THE LOGBOOK AVAILABLE FOR INSPECTION ON REQUEST.

### 4.2 GENERAL MAINTENANCE REQUIREMENTS

PLEASE NOTE THE TERM 'MAINTENANCE' THROUGHOUT THE BELOW PERTAINS TO WORKS UNDERTAKEN WITHIN THE ENTIRE ESTABLISHMENT AND MAINTENANCE PHASES.

THE LANDSC