P:\BNAME\L:\Jobs\2023\L23108 79 Courtney Drive, Upper Coomera_OPW_OPW16_WORKING\DRAWINGS\CAD\L23108_OPW STG 02_PRIVATE.dwg\PLOTTED:
9/2/2024 12:25 PM

PLEASE PRINT IN COLOUR

C M Y K

FOR APPROVAL

LANDSCAPE PLANS APPROVED

- To be constructed in accordance with the approved plan.
- Approval is subject to the observance of any amendments noted in red thereon.
- Landscape to be inspected and approved by Council Officers, prior to the use commencing on the land.
- No canopy trees to be planted within 3 metres of building foundations or rooflines (including neighbouring properties)
- All landscape materials, plants, vegetation and watering systems shown on the approved landscaping plan must be an acceptable quality and be installed and maintained to the satisfaction of the Chief Executive Officer.

Application No.: COM/2024/267

Dated: 23 September 2024

OPW.

CALLI | SUBDIVISION: STAGE 02 - PRIVATE

79-99 COURTNEY DRIVE, UPPER COOMERA, QLD.

LOT 188-192 ON RP173728

PROJECT REFERENCE - L23108

SHEET SET

L23108 - 100 | TITLE PAGE & SHEET SET

LANDSCAPE PLANS

L23108 - 200 | STAGING & EXTENT OF WORKS
L23108 - 201 | FENCING PLAN
L23108 - 202 | TREATMENT AREAS
L23108 - 203 | PLANTING PLAN - ZONE 01

DETAILS & SECTIONS

L23108 - 300 | DETAIL DRAWINGS 01

SPECIFICATIONS

L23108 - 400 | LANDSCAPE SPECIFICATIONS

WARNING!!!

BEWARE OF UNDERGROUND SERVICES

NOTE THAT LOCATION SHOWN OF EXISTING UNDERGROUND SERVICES IS INDICATIVE ONLY AND MAY NOT BE ACCURATE AT THE TIME OF LANDSCAPE WORKS. NO GUARANTEE IS GIVEN THAT ALL EXISTING SERVICES ARE SHOWN.

DETERMINATION OF THE EXACT POSITION AND EXTENT OF UNDERGROUND SERVICES IS THE RESPONSIBILITY OF THE CONTRACTOR AND IS TO BE CONFIRMED ON SITE PRIOR TO COMMENCEMENT OF WORK.

GENERAL NOTES

1. BEFORE COMMENCEMENT OF WORKS IT IS THE RESPONSIBILITY OF THE LANDSCAPE CONTRACTOR TO CONTACT DIAL BEFORE YOU DIG (PH. 1100 OR WEB 1100.COM.AU) FOR INFORMATION ON SERVICES IN THE AREA SHOWN ON THE PLAN.
2. THE CONTRACTOR SHALL VERIFY THE LOCATION AND DEPTH OF ALL SERVICES PRIOR TO COMMENCING ON SITE.
3. THE CONTRACTOR SHALL BE LIABLE FOR ANY DAMAGE TO SERVICES DURING LANDSCAPE WORKS.
4. THE CONTRACTOR SHALL VERIFY THE LOCATION OF ANY EXISTING TREES SHOWN TO BE RETAINED AND PROTECT THEM DURING WORKS.
5. ALL TREES SHALL BE PLANTED IN LOCATIONS SHOWN ON THE PLAN.
6. ANY CHANGE TO PLANT SPECIES MUST HAVE THE APPROVAL OF THE LANDSCAPE ARCHITECT.
7. TREES SHALL BE PLANTED NO LESS THAN THE FOLLOWING DISTANCES FROM LANDSCAPE ELEMENTS (TO BE CONFIRMED AT TREE HOLE INSPECTION)
   - 1M FROM STORMWATER OUTLET
   - 1M FROM EDGE OF GULLY PIT
   - 1M MINIMUM PLANTING WIDTH BETWEEN KERB AND PATHWAY
   - 1M FROM CENTRE OF TREE TO FRONT FACE OF KERB AND CHANNEL
   - 1M FROM OVERHEAD SERVICE WIRES
   - 2M FROM FRONT OR REAR OF STREETSIGNS
   - 3M FROM DRIVEWAYS
   - 3M FROM FIRE HYDRANTS
   - 3.5 M FROM GROUND MOUNTED TRANSFORMERS
   - 6M FROM EXISTING TREES
   - 6M FROM DEPARTURE SIDE OF BUS STOPS AND PED CROSSINGS
   - 7M FROM POWER POLES/ LIGHT POLES
   - 8M MINIMUM SPACING BETWEEN NEW TREES
   - 15M FROM APPROACH SIDE OF BUS STOPS AND PEDESTRIAN CROSSINGS
   - 15M FROM DEPARTURE SIDE OF A STREET INTERSECTION
   - 20M FROM APPROACH SIDE OF A STREET INTERSECTION
8. CONSTRUCTION CERTIFICATION FOR ALL STRUCTURAL ELEMENTS IS TO BE PROVIDED PRIOR TO PRACTICAL COMPLETION BEING GRANTED.

REFERENCE DATA REGISTER | CURRENT REVISION

CONSULTANT	REVISION	DOCUMENT TITLE (INCL. FILE TYPE)	DATE RECEIVED	PROVIDED BY
ARCHITECTUAL	-	-	-	-
CIVIL	C	OPERATIONAL WORKS: STAGE 01 - 41901-01	25.08.23	MORTONS URBAN SOLUTIONS
ELECTRICAL	B	STAGE 01 COURTNEY DRIVE - F019-01	08.11.23	ROBIN RUSSELL & ASSOC
SURVEY	-	-	-	-

PROJECT TITLE

CALLI | SUBDIVISION: STAGE 02 - PRIVATE

OPERATIONAL WORKS: LANDSCAPE

DRAWING TITLE

TITLE PAGE & SHEET LIST

REV	DESCRIPTION	DATE	DRAWN	DESIGN	CHECK	APP
B	FOR APPROVAL	29.08.2024	MB	MB	MB	JB
A	PRELIMINARY ISSUE	29.08.2024	MB	MB	MB	JB

ISSUE: FOR APPROVAL

CLIENT: HB LAND PTY LTD

BASE PROVIDED BY: MORTONS URBAN SOLUTIONS

MANAGER: JON BROOKSBY

COPYRIGHT Zone Landscape 2018. This document and the information are solely for the use of the authorised recipient and this document may not be used, copied or reproduced in whole or part for any purpose other than that for which it was supplied by Zone Landscape 2018. Zone Landscape makes no representation, undertakes no duty and accepts no responsibility to any third party who may use or rely upon this document or the information.

zone Landscape Architecture

ZONE LANDSCAPE ARCHITECTURE

GOLD COAST
1638 Tweed Street, Burleigh Heads QLD 4220
PO Box 3805, Burleigh Town QLD 4220

GLADSTONE
2/172 Goondoon St, Gladstone, QLD 4680
PO Box 5332, Gladstone QLD 4680

zonelandscape.com.au | 07 55622303

JOB / DRAWING NO: L23108 - 100

SHEET NO. 01 OF 07

Plot: ISO A1 | User: 00020L23188 BB Country Drive, Upper Coomera L:\DPW\L\DPW\L WORKING\DRAWINGS\L\CAD\L23108_DPW STG 02_PRIVATE.dwg | PLOTTED: 9/2/2024 12:23 PM

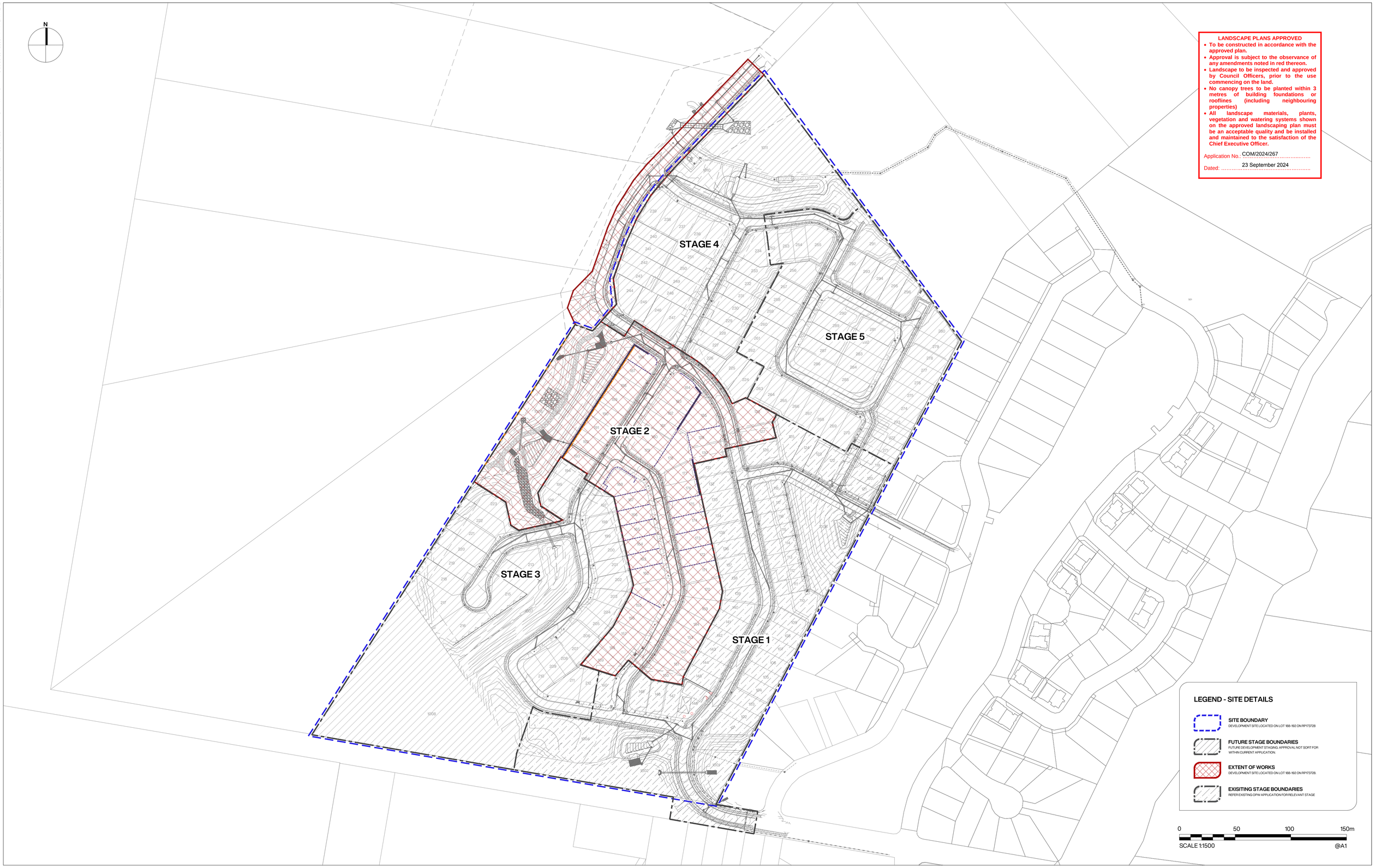

PROJECT TITLE

CALLI | SUBDIVISION: STAGE 02 - PRIVATE

OPERATIONAL WORKS: LANDSCAPE

DRAWING TITLE

STAGING & EXTENT OF WORKS

REV	DESCRIPTION	DATE	DRAWN	DESIGN	CHECK	APP
B	FOR APPROVAL	29.08.2024	MB	MB	MB	JB
A	PRELIMINARY ISSUE	29.08.2024	MB	MB	MB	JB

ISSUE: FOR APPROVAL

CLIENT: HB LAND PTY LTD

BASE PROVIDED BY: MORTONS URBAN SOLUTIONS

MANAGER: JON BROOKSBY

COPYRIGHT Zone Landscape 2018. This document and the information are solely for the use of the authorised recipient and this document may not be used, copied or reproduced in whole or part for any purpose other than that for which it was supplied by Zone Landscape 2018. Zone Landscape makes no representation, undertakes no duty and accepts no responsibility to any third party who may use or rely upon this document or the information.

zone Landscape Architecture

ZONE LANDSCAPE ARCHITECTURE

GOLD COAST
1638 Tweed Street, Burleigh Heads QLD 4220
PO Box 3805, Burleigh Town QLD 4220

GLADSTONE
2/172 Goondoon St, Gladstone, QLD 4680
PO Box 5332, Gladstone QLD 4680

zonelandscape.com.au | 07 55622303

JOB / DRAWING NO: L23108 - 200

SHEET NO. 02 OF 07

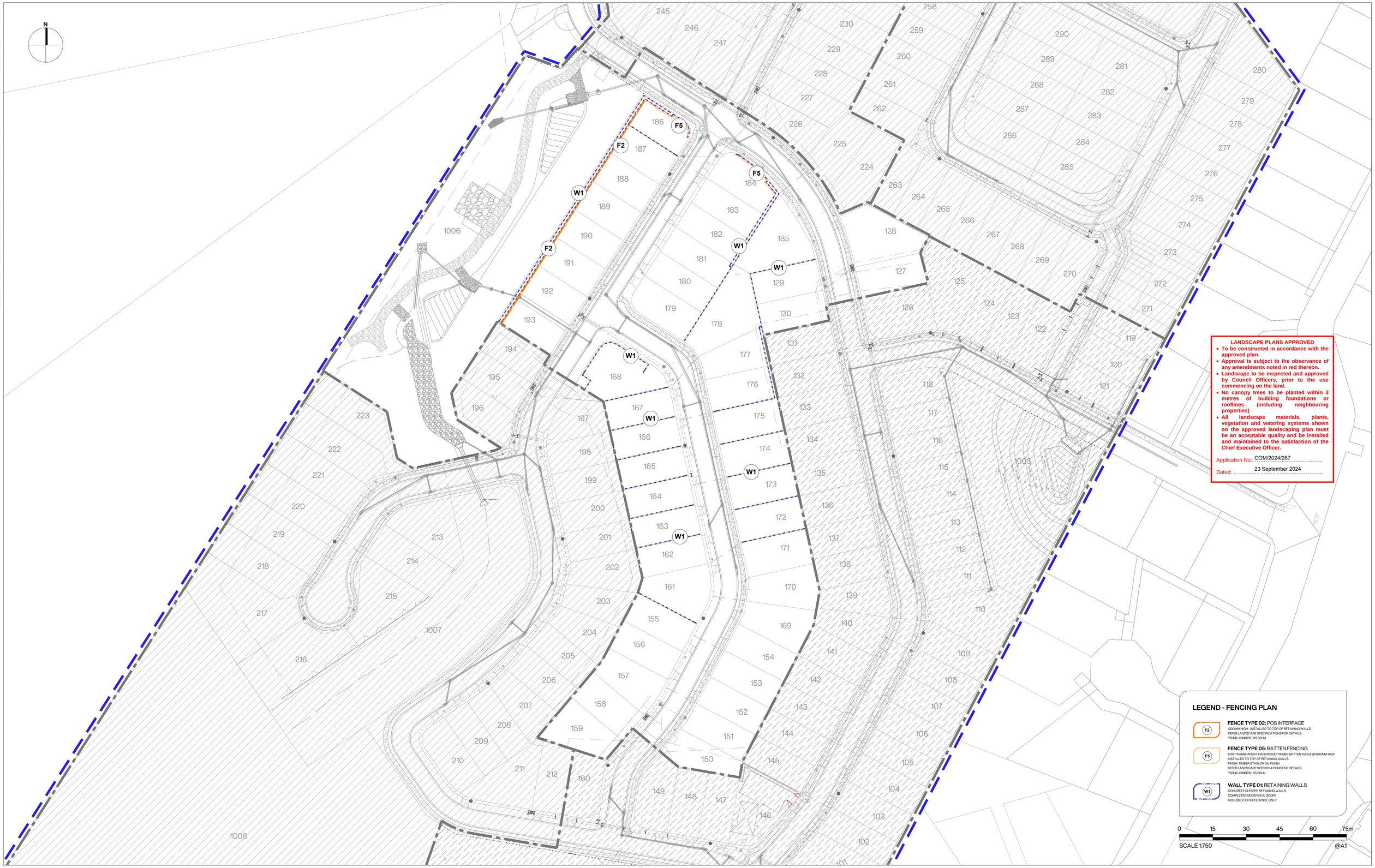

LANDSCAPE PLANS APPROVED

- To be constructed in accordance with the approved plan.
- Approval is subject to the observance of any amendments noted in red thereon.
- Landscape to be inspected and approved by Council Officers, prior to the use commencing on the land.
- No canopy trees to be planted within 3 metres of building foundations or rooflines (including neighbouring properties)
- All landscape materials, plants, vegetation and watering systems shown on the approved landscaping plan must be an acceptable quality and be installed and maintained to the satisfaction of the Chief Executive Officer.

Application No.: COM/2024/267

Dated: 23 September 2024

LEGEND - FENCING PLAN

F2 — **FENCE TYPE 02:** POS INTERFACE
1200MM HIGH - INSTALLED TO TOP OF RETAINING WALLS
REFER LANDSCAPE SPECIFICATIONS FOR DETAILS.
TOTAL LENGTH: 119.30LM

F5 — **FENCE TYPE 05:** BATTEN FENCING
50% TRANSPARENT HARDWOOD TIMBER BATTEN FENCE @1800MM HIGH
INSTALLED TO TOP OF RETAINING WALLS.
FINISH: TIMBER STAIN OR OIL FINISH.
REFER LANDSCAPE SPECIFICATIONS FOR DETAILS.
TOTAL LENGTH: 55.00LM

W1 — **WALL TYPE 01:** RETAINING WALLS
CONCRETE SLEEPER RETAINING WALLS
COMPLETED UNDER CIVIL SCOPE
INCLUDED FOR REFERENCE ONLY

PROJECT TITLE

CALLI | SUBDIVISION: STAGE 02 - PRIVATE

OPERATIONAL WORKS: LANDSCAPE

DRAWING TITLE

FENCING PLAN

REV	DESCRIPTION	DATE	DRAWN	DESIGN	CHECK	APP
B	FOR APPROVAL	29.08.2024	MB	MB	MB	JB
A	PRELIMINARY ISSUE	29.08.2024	MB	MB	MB	JB

ISSUE:	CLIENT:
FOR APPROVAL	HB LAND PTY LTD
BASE PROVIDED BY:	**MANAGER:**
MORTONS URBAN SOLUTIONS	JON BROOKSBY

COPYRIGHT Zone Landscape 2018. This document and the information are solely for the use of the authorised recipient and this document may not be used, copied or reproduced in whole or part for any purpose other than that for which it was supplied by Zone Landscape 2018. Zone Landscape makes no representation, undertakes no duty and accepts no responsibility to any third party who may use or rely upon this document or the information.

zone Landscape Architecture

ZONE LANDSCAPE ARCHITECTURE

GOLD COAST
1638 Tweed Street, Burleigh Heads QLD 4220
PO Box 3805, Burleigh Town QLD 4220

GLADSTONE
2/172 Goondoon St, Gladstone, QLD 4680
PO Box 5332, Gladstone QLD 4680

zonelandscape.com.au | 07 55622303

JOB / DRAWING NO:

L23108 - 201

SHEET NO.

03 OF 07

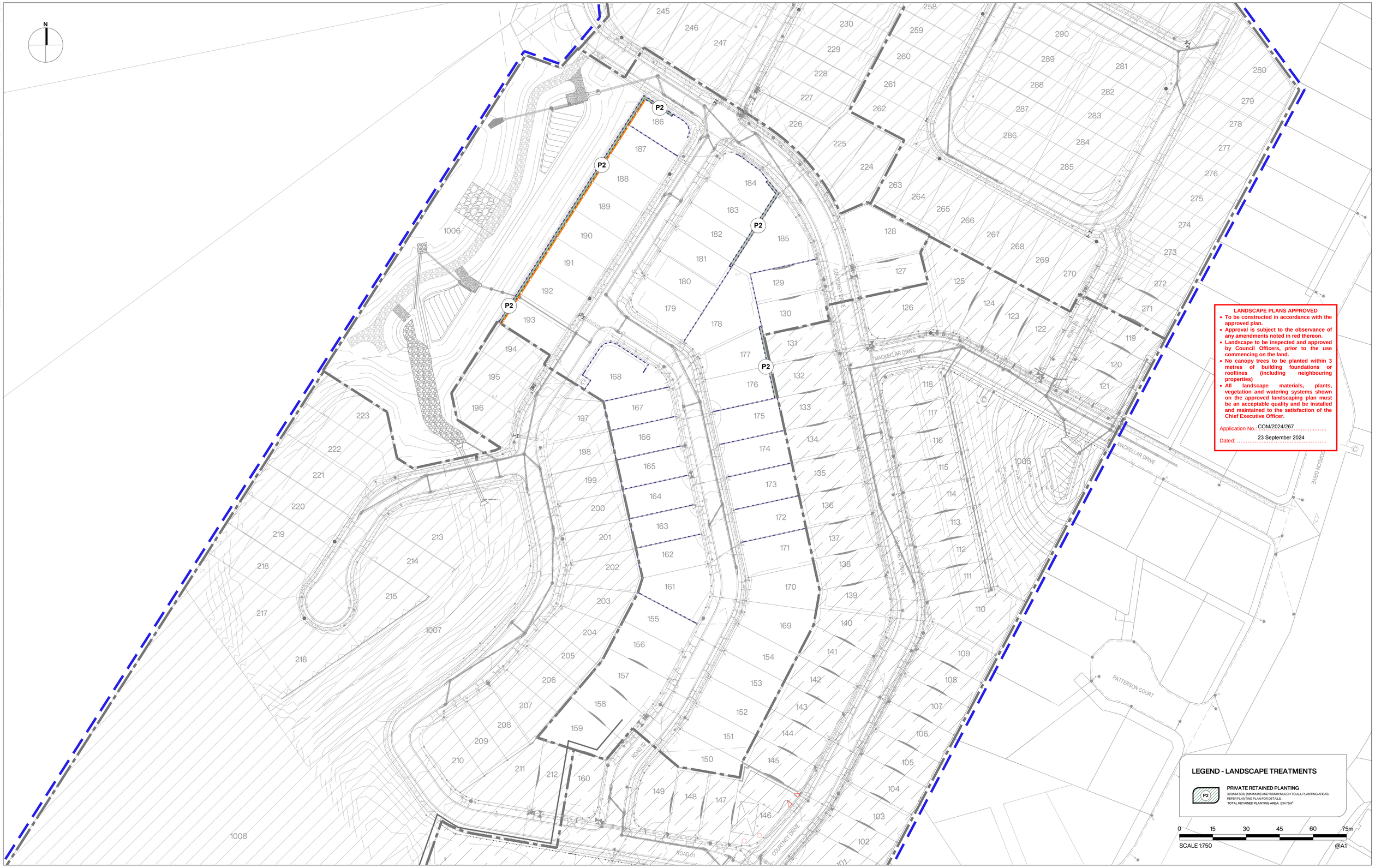

PROJECT TITLE

CALLI | SUBDIVISION: STAGE 02 - PRIVATE

OPERATIONAL WORKS: LANDSCAPE

DRAWING TITLE

TREATMENT AREAS

REV	DESCRIPTION	DATE	DRAWN	DESIGN	CHECK	APP
B	FOR APPROVAL	29.08.2024	MB	MB	MB	JB
A	PRELIMINARY ISSUE	29.08.2024	MB	MB	MB	JB

ISSUE: FOR APPROVAL

CLIENT: HB LAND PTY LTD

BASE PROVIDED BY: MORTONS URBAN SOLUTIONS

MANAGER: JON BROOKSBY

COPYRIGHT Zone Landscape 2018. This document and the information are solely for the use of the authorised recipient and this document may not be used, copied or reproduced in whole or part for any purpose other than that for which it was supplied by Zone Landscape 2018. Zone Landscape makes no representation, undertakes no duty and accepts no responsibility to any third party who may use or rely upon this document or the information.

zone Landscape Architecture

ZONE LANDSCAPE ARCHITECTURE

GOLD COAST
1638 Tweed Street, Burleigh Heads QLD 4220
PO Box 3805, Burleigh Town QLD 4220

GLADSTONE
2/172 Goondoon St, Gladstone, QLD 4680
PO Box 5332, Gladstone QLD 4680

zonelandscape.com.au | 07 55622303

JOB / DRAWING NO: L23108 - 202

SHEET NO. 04 OF 07

P:\L23108\L23108 - Lot 1002\L23108 68 Courtney Drive, Upper Coomera_OPWL_OPWL_WORKING\DRAWINGS\LOADL23108_OPWS110.DWG_PRIVATE.dwg | PLOTTED: 9/2/2024 12:23 PM

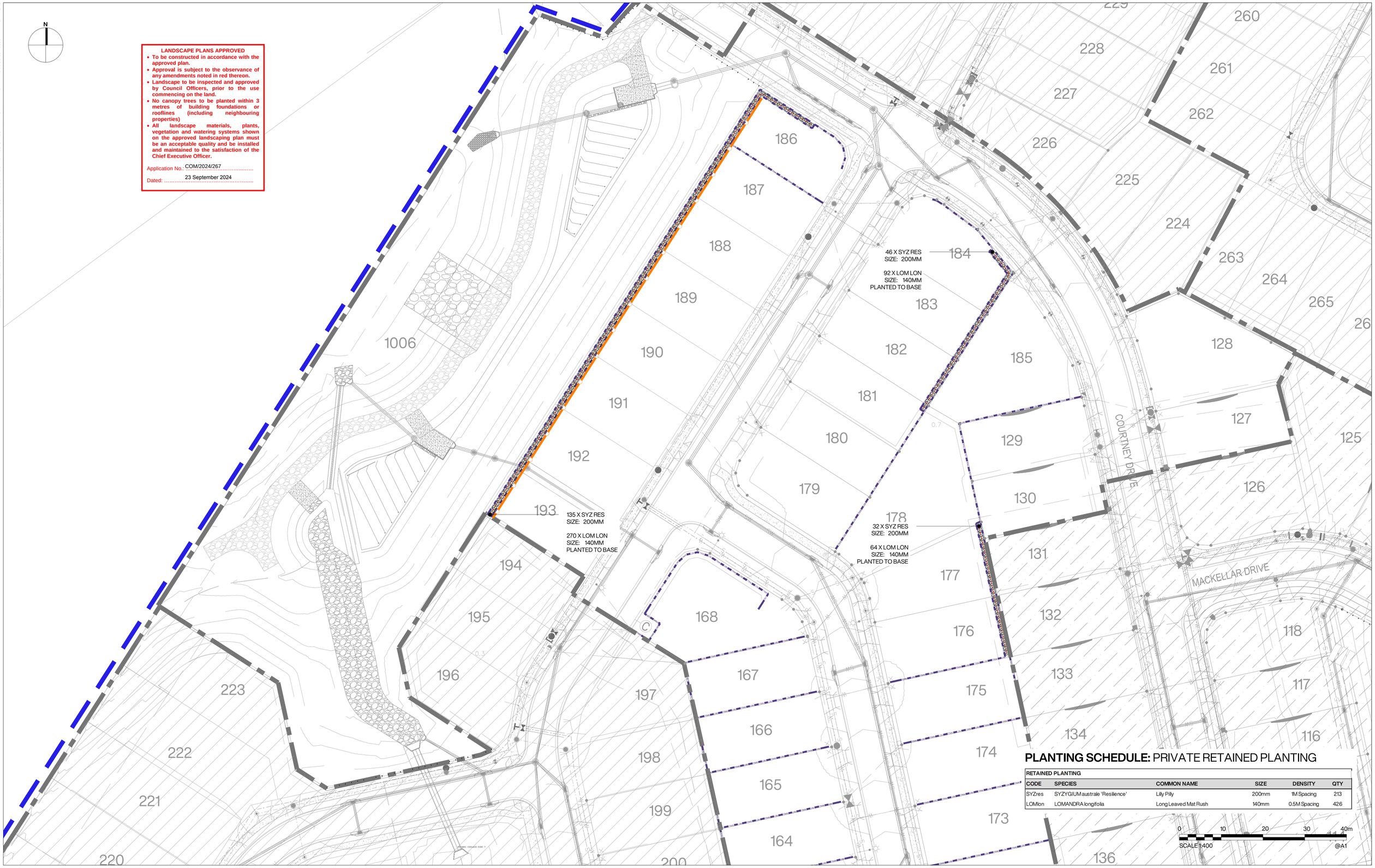

LANDSCAPE PLANS APPROVED

- To be constructed in accordance with the approved plan.
- Approval is subject to the observance of any amendments noted in red thereon.
- Landscape to be inspected and approved by Council Officers, prior to the use commencing on the land.
- No canopy trees to be planted within 3 metres of building foundations or rooflines (including neighbouring properties)
- All landscape materials, plants, vegetation and watering systems shown on the approved landscaping plan must be an acceptable quality and be installed and maintained to the satisfaction of the Chief Executive Officer.

Application No.: COM/2024/267

Dated: 23 September 2024

PLANTING SCHEDULE: PRIVATE RETAINED PLANTING

RETAINED PLANTING

CODE	SPECIES	COMMON NAME	SIZE	DENSITY	QTY
SYZres	SYZYGIUM australe 'Resilience'	Lilly Pilly	200mm	1M Spacing	213
LOMlon	LOMANDRA longifolia	Long Leaved Mat Rush	140mm	0.5M Spacing	426

PROJECT TITLE

CALLI | SUBDIVISION: STAGE 02 - PRIVATE

OPERATIONAL WORKS: LANDSCAPE

DRAWING TITLE

PLANTING PLAN - ZONE 01

REV	DESCRIPTION	DATE	DRAWN	DESIGN	CHECK	APP
B	FOR APPROVAL	29.08.2024	MB	MB	MB	JB
A	PRELIMINARY ISSUE	29.08.2024	MB	MB	MB	JB

ISSUE: FOR APPROVAL

CLIENT: HB LAND PTY LTD

BASE PROVIDED BY: MORTONS URBAN SOLUTIONS

MANAGER: JON BROOKSBY

COPYRIGHT Zone Landscape 2018. This document and the information are solely for the use of the authorised recipient and this document may not be used, copied or reproduced in whole or part for any purpose other than that for which it was supplied by Zone Landscape 2018. Zone Landscape makes no representation, undertakes no duty and accepts no responsibility to any third party who may use or rely upon this document or the information.

zone Landscape Architecture

ZONE LANDSCAPE ARCHITECTURE

GOLD COAST
1638 Tweed Street, Burleigh Heads QLD 4220
PO Box 3805, Burleigh Town QLD 4220

GLADSTONE
2/172 Goondoon St, Gladstone, QLD 4680
PO Box 5332, Gladstone QLD 4680

zonelandscape.com.au | 07 55622303

JOB / DRAWING NO: L23108 - 203

SHEET NO. 05 OF 07

Plot Date: 9/23/2024 L:\Jobs\2023\L23108 99 Courtney Drive, Upper Coomera_OPWs_CAD\WL WORKING\DRAWINGS\L(AD)L23108_OPW STG 02_PRIVATE.dwg | PLOTTED: 9/23/2024 12:23:15 PM

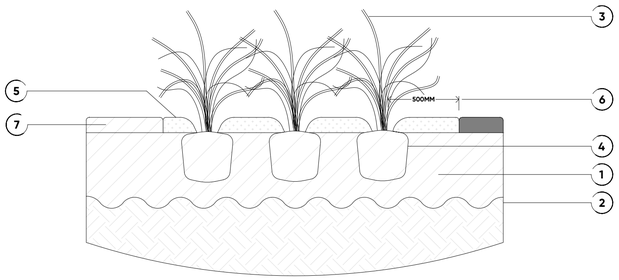

D01 TYPICAL DETAIL 01 - GENERAL PLANTING

REFER ALSO SPECIFICATIONS FOR FURTHER DETAILS

REFER TO DETAILED SPECIFICATION REGARDING SOIL AND MULCH TYPES, ALL ASSOCIATED MATERIAL QUALITY REQUIREMENTS AND STANDARDS INCLUDING REQUIRED HOLD POINTS AND GENERAL MAINTENANCE REQUIREMENTS

INSTALLATION

1.0 PREPARE PLANTING AREA TO ENSURE SOIL PROFILE AS SPECIFIED (TYPICAL MINIMUM 300MM SOIL IMPORT OR IMPROVED SITE SOIL TO AS4419-2003, REFER TO SPECIFICATIONS).
2.0 CULTIVATE THE SURROUNDING SUBGRADE TO 100MM IN DEPTH AND REMOVE ANY STONE OR ROCK EXCEEDING 50MM IN DIAMETER AS WELL AS ANY ORGANIC MATERIAL SUCH AS ROOTS STICK CLODS OR WEEDS (BROUGHT IN THROUGH EXCAVATION PROCESS). IN GENERAL, REMOVE ANY ALL MATERIAL OR DEBRIS THAT WOULD BE DETRIMENTAL TO PLANT HEALTH.
3.0 PLANT TYPE, SIZE, DENSITIES AND LOCATION AS SPECIFIED ON PLANS AND PLANTING SCHEDULES.
4.0 INSTALL SLOW RELEASE FERTALISER IN LINE WITH BEST PRACTICE OR AS SPECIFIED IN THIS DOCUMENT.
5.0 INSTALL MULCH AS SPECIFIED TO A DEPTH OF 100MM. ENSURE MULCH IS PLACED MINIMUM 500MM FROM PLANT STEMS. MULCH SHOULD BE PROFILED GENERALLY AS ILLUSTRATED TO CREATE A 'WELL' AROUND THE PLANT STOCK TO PROMOTE WATER RETENTION.
6.0 ENSURE MINIMUM OFFSET OF 500MM FROM ANY PATHWAYS, FENCE LINES, FOOTINGS ETC OR AS SPECIFIED IN THIS DOCUMENT
7.0 REFER TO PLANS AND RELEVANT STANDARD DETAIL FOR ADJACENT LANDSCAPE TREATMENTS.

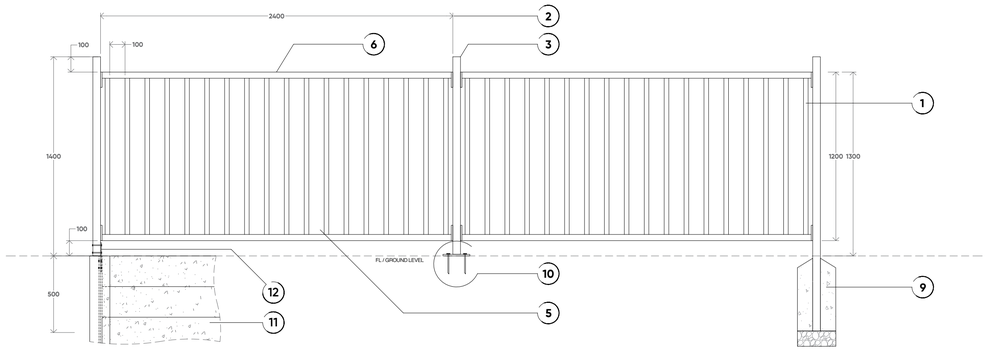

D03 TYPICAL DETAIL 03 - FENCE TYPE 02

REFER ALSO SPECIFICATIONS FOR FURTHER DETAILS

SCALE - REFER NOTED DIMENSIONS

REFER TO LANDSCAPE PLANS RE LOCATION AND SETOUT. TYPICALLY ALL FENCES ARE TO BE INSTALLED WITH PUBLIC LOT / LOT REFERENCED AS SUBJECT SITE IN ALL / ANY ASSOCIATED APPROVALS. FACE OF FENCE TO BE ALIGNED WITH LOT BOUNDARY UNLESS OFFSET IS PROPOSED - REFER PLANS FOR ALIGNMENT AND SETOUT.

FOR THE PURPOSES OF THIS PROJECT THE APPROVED PRODUCT AND ASSOCIATED SPECIFICATIONS ARE NOTED BELOW. AN APPROVED EQUIVALENT CAN BE USED HOWEVER MUST BE IN GENERAL ACCORDANCE WITH THE SPECIFICATIONS AS DETAILED BELOW AND IN STRICT ADHERENCE TO RELEVANT AUSTRALIAN STANDARDS AND LOCAL GOVERNMENT BUILDING REGULATIONS AND MUST BE APPROVED BY PROJECT MANAGER AND LANDSCAPE ARCHITECT.

GENERAL SPECIFICATIONS

1.0 STANDARD PANEL HEIGHT: 1200MM
2.0 STANDARD PANEL LENGTH: 2400MM (NOMINAL)
3.0 FENCE POSTS (TYPE 01) : 50X50X1.6MM X 1900MM LONG STEEL RHS (AVG 500MM IN-GROUND AND 100MM ABOVE TOP RAIL WHEN GROUND MOUNTED - 1400MM POSTS WHEN FLANGE MOUNTED)
MATERIAL: PRE-GALVANISED STEEL, HOLLOW RHS TO AS1450:1983 AND AS1397:2001. WELD TYPE: SILICON BRONZE
4.0 VERTICAL PICKETS Ø19X1.2MM ROUND PICKET PASSING INTO 40X40X1.6MM HORIZONTAL RAILS AT 106 CENTERS.
5.0 FLAT (RHS) TOP & BOTTOM RAIL WITH THE PICKET INSERTED INTO THE TOP RAIL AND FINISHING FLUSH WITH THE UNDERSIDE OF THE BOTTOM RAIL.

PRODUCT FINISH: POLYESTER POWDER COAT TO AS 4506:2005 METAL FINISHING - THERMOSET POWDER COATINGS. COLOUR SATIN BLACK
APPROVED PRODUCT: BLUEDOG POOL N PLAY

INSTALLATION

REFER TO PLANS AND SPECIFICATION RE LOCATION OF IN-GROUND INSTALLATION VERSES FLANGE-MOUNTED ON GRADE INSTALLATION.
8.0 IN GROUND INSTALLATION, 500MM DEPTH POST WITHIN CONCRETE FOOTING 20MPA 100MM MINIMUM COVER TO ALL FACES
9.0 COARSE GRAVEL / BLUESTONE TO 100MM DEPTH, ASSIST IS DRAINAGE AND SETTING OF FENCE POSTS (TIMBER POST ONLY)
- OR -
10.0 FLANGE GROUND MOUNTING, REFER TO MANUFACTURERS SPECIFICATIONS, GENERALLY GALVANIZED CHEMSET CS10130 M10 X 130MM
- OR -
11.0 CONCRETE SLEEPER RETAINING WALL AND I-BEAM BRACES
12.0 FENCE POST MOUNT BRACKET TO INSIDE FACE OF I-BEAM.

AUSTRALIAN STANDARDS (SUMMARY ONLY)

AUSTRALIAN STANDARD AS19261

POOL FENCE - HEIGHT: POOL FENCE SHALL BE NOT LESS THAN 1.2M HIGH.

POOL FENCE - NON CLIMBABLE ZONE (NCZ)NON CLIMBABLE ZONE (NCZ) OF 900MM ON THE OUTSIDE OF THE POOL FENCE ALL THE WAY AROUND

POOL FENCE - VERTICAL GAPS: GAPS BETWEEN VERTICAL MEMBERS OF THE FENCE SHALL NOT BE GREATER THAN 100MM. VERTICAL GAPS IN THE FENCE MUST NOT BE MORE THAN 100MM.

POOL FENCE - GAP AT BOTTOM: GAP AT THE BOTTOM OF THE FENCE MUST BE A MAXIMUM OF 100MM.

POOL FENCE - HORIZONTAL CLIMBABLE MEMBERS: HORIZONTAL MEMBERS SHALL NOT BE WITHIN THE 900MM NON CLIMBABLE ZONE (NCZ) (ON THE OUTSIDE OF THE POOL FENCE).

LANDSCAPE PLANS APPROVED

- **To be constructed in accordance with the approved plan.**
- **Approval is subject to the observance of any amendments noted in red thereon.**
- **Landscape to be inspected and approved by Council Officers, prior to the use commencing on the land.**
- **No canopy trees to be planted within 3 metres of building foundations or rooflines (including neighbouring properties)**
- **All landscape materials, plants, vegetation and watering systems shown on the approved landscaping plan must be an acceptable quality and be installed and maintained to the satisfaction of the Chief Executive Officer.**

Application No.: COM/2024/267

Dated: 23 September 2024

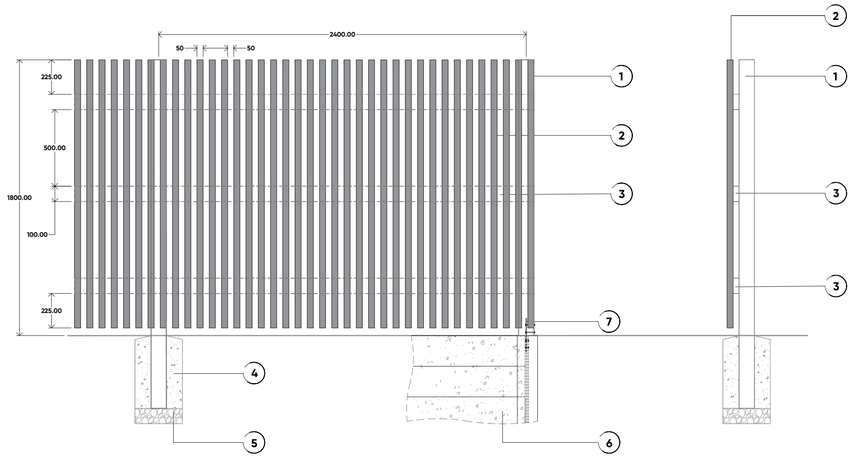

D02 TYPICAL DETAIL 02 - FENCE TYPE 05

SCALE 1:20 - REFER NOTED DIMENSIONS

REFER TO LANDSCAPE PLANS RE LOCATION AND SETOUT. TYPICALLY ALL FENCES ARE TO BE INSTALLED WITH PUBLIC LOT / LOT REFERENCED AS SUBJECT SITE IN ALL / ANY ASSOCIATED APPROVALS. FACE OF FENCE TO BE ALIGNED WITH LOT BOUNDARY UNLESS OFFSET IS PROPOSED - REFER PLANS FOR ALIGNMENT AND SETOUT.

FOR THE PURPOSES OF THIS PROJECT THE APPROVED PRODUCT AND ASSOCIATED SPECIFICATIONS ARE NOTED BELOW. AN APPROVED EQUIVALENT CAN BE USED HOWEVER MUST BE IN GENERAL ACCORDANCE WITH THE SPECIFICATIONS AS DETAILED BELOW AND IN STRICT ADHERENCE TO RELEVANT AUSTRALIAN STANDARDS AND LOCAL GOVERNMENT BUILDING REGULATIONS AND MUST BE APPROVED BY PROJECT MANAGER AND LANDSCAPE ARCHITECT.

GENERAL SPECIFICATIONS

1.0 100 X 100 TIMBER HARDWOOD POSTS SPACED AT 2440MM CENTERS. REFER TO FINISHES SCHEDULE FOR COLOUR /TREATMENT
2.0 50 X 50MM TIMBER HARDWOOD BATTENS FIXED TO RAILS. 50MM CLEAR BETWEEN BATTENS. REFER TO FINISHES SCHEDULE FOR COLOUR /TREATMENT
3.0 100 X 38MM TIMBER HARDWOOD RAILING FIXED WITH GALVANISED BATTEN SCREWS. ARRIS ALL EDGES 10MM

TIMBER FINISH : TWO COATS OF CN OIL OR APPROVED EQUIVALENT

INSTALLATION

4.0 INGROUND INSTALLATION, 600MM DEPTH POST WITHIN CONCRETE FOOTING 20MPA 100MM MINIMUM COVER TO ALL FACES
5.0 COARSE GRAVEL / BLUESTONE TO 100MM DEPTH, ASSIST IS DRAINAGE AND SETTING OF FENCE POSTS (TIMBER POST ONLY)
- OR -
6.0 CONCRETE SLEEPER RETAINING WALL AND I-BEAM BRACES
7.0 FENCE POST MOUNT BRACKET TO INSIDE FACE OF I-BEAM.

PROJECT TITLE

CALLI | SUBDIVISION: STAGE 02 - PRIVATE

OPERATIONAL WORKS: LANDSCAPE

DRAWING TITLE

DETAIL DRAWINGS

REV	DESCRIPTION	DATE	DRAWN	DESIGN	CHECK	APP
B	FOR APPROVAL	29.08.2024	MB	MB	MB	JB
A	PRELIMINARY ISSUE	29.08.2024	MB	MB	MB	JB

ISSUE: FOR APPROVAL

CLIENT: HB LAND PTY LTD

BASE PROVIDED BY: MORTONS URBAN SOLUTIONS

MANAGER: JON BROOKSBY

COPYRIGHT Zone Landscape 2018. This document and the information are solely for the use of the authorised recipient and this document may not be used, copied or reproduced in whole or part for any purpose other than that for which it was supplied by Zone Landscape 2018. Zone Landscape makes no representation, undertakes no duty and accepts no responsibility to any third party who may use or rely upon this document or the information.

ZONE LANDSCAPE ARCHITECTURE

GOLD COAST
1638 Tweed Street, Burleigh Heads QLD 4220
PO Box 3805, Burleigh Town QLD 4220

GLADSTONE
2/172 Goondoon St, Gladstone, QLD 4680
PO Box 5332, Gladstone QLD 4680

zonelandscape.com.au | 07 55622303

JOB / DRAWING NO: L23108 - 300

SHEET NO. 06 OF 07

1.0 BEFORE WE GET GOING

1.1 FAMILIARAISE YOURSELF WITH PLANS, SITE AND SCOPE

IT IS THE RESPONSIBILITY OF THE LANDSCAPE CONTRACTOR TO FAMILIARISE THEMSELVES WITH THE SUBJECT SITE TO SATISFY THEMSELVES AS TO LOCAL CONDITIONS, ACCESSIBILITY, STORAGE SPACE, THE FULL EXTENT AND SCOPE OF THE WORKS, THE NATURE OF THE GROUND AND THE FULL GAMUT OF THE SCOPE OF WORKS GENERALLY. NO CLAIM WILL BE ALLOWED FOR ANY ALLEGED INADEQUACY OF THE DESCRIPTION WITHIN THIS CONSTRUCTION DOCUMENTATION. SITE VISITS MAY BE MADE BY ARRANGEMENT WITH THE SUPERVISING OFFICER.

IF, IN THE UNFORTUNATE EVENT THERE ARE CONFLICTS BETWEEN TYPICAL DETAILS, SPECIFICATIONS, PLAN NOTES AND OR ASSOCIATED PROJECT BOQ, PLEASE CONTACT THE LANDSCAPE ARCHITECT TO SEEK CLARIFICATION.PLEASE DO NOTE MAKE ANY ASSUMPTIONS IN THIS REGARD ...IF IN DOUBT, PLEASE ASK.

THE LANDSCAPE SUBCONTRACTOR WILL BE RESPONSIBLE FOR THE CONSTRUCTION OF ALL OF THE HARD AND SOFTSCAPE WORKS AS DETAILED WITHIN THIS PLAN SET UNLESS NOTED OTHERWISE.

A COPY OF THE DECISION NOTICE AND A SET OF STAMPED APPROVED PLANS ARE KEPT ON SITE AT ALL TIMES. VERIFY LOCATION OF ALL SERVICES PRIOR TO COMMENCEMENT OF WORKS.

1.2 FAMILIARAISE YOURSELF EXISTING & PROPOSED SERVICES

IT IS THE RESPONSIBILITY OF THE LANDSCAPE CONTRACTOR TO VERIFY LOCATION OF ALL SERVICES PRIOR TO COMMENCEMENT OF WORKS.

CIVIL, STRUCTURAL, ELECTRICAL AND HYDRAULIC WORKS INFORMATION AND LOCATIONS OF EXISTING INFRASTRUCTURE CONTAINED WITHIN THIS DOCUMENT ARE TO BE CONSIDERED INDICATIVE ONLY. IT IS THE RESPONSIBILITY OF THE LANDSCAPE CONTRACTOR TO LIAISE WITH THESE DISCIPLINES AS REQUIRED AND TO REVIEW EACH DISCIPLINE'S "FOR CONSTRUCTION" PLANS TO CROSS REFERENCE EACH LOCATION WHERE THEY INTEND TO COMPLETE WORKS (THESE WILL BE KEPT WITHIN THE PROJECT OFFICE OR SITE SHED AT ALL TIMES).

A NUMBER OF EXISTING UNDERGROUND SERVICES MAY ALSO BE PRESENT ON THE SITE. THE POSITION OF SUCH SERVICES WILL BE INDICATED ON DRAWINGS PROVIDED BY THE SUPERINTENDENT. THE LANDSCAPE SUBCONTRACTOR MUST ALLOW FOR ALL NECESSARY PRECAUTIONS DURING EXCAVATIONS OR OTHER OPERATIONS TO AVOID DAMAGE TO SERVICES.

THE LANDSCAPE SUBCONTRACTOR SHALL PROTECT EXISTING SERVICES AND SHALL BE HELD RESPONSIBLE FOR ENSURING THAT NO DAMAGE IS CAUSED TO ANY EXISTING PIPES, DUCTS, SEWERS, GAS, WATER AND ELECTRICITY SERVICES MAINS OR INSTALLATIONS, TELEPHONE CABLES AND OVERHEAD CABLES. ANY SUCH DAMAGE SHALL BE REPORTED IMMEDIATELY AND THE NECESSARY REPAIRS CARRIED OUT AT THE LANDSCAPE SUBCONTRACTOR'S EXPENSE.

1.3 FIRE ANTS & MYRTLE RUST

THESE ARE TWO COMMON ISSUES THAT THE LANDSCAPE CONTRACTOR MUST REMAIN AWARE OF. THE LANDSCAPE SUBCONTRACTOR IS TO CARRY OUT ALL NECESSARY MEASURES, INSPECTIONS AND SAFEGUARDS TO ENSURE FIRE ANTS AND MYRTLE RUST DO NOT ENTER THE SITE VIA EQUIPMENT, MACHINERY, MATERIALS AND PLANT STOCK. CONTACT THE SITE SUPERVISOR OR LANDSCAPE ARCHITECT IMMEDIATELY IN THE EVENT THAT FIRE ANT, MYRTLE RUST IS IDENTIFIED TO ENSURE BEST PRACTICE SOLUTIONS ARE IMPLEMENTED AND THE RELEVANT AUTHORITIES ARE NOTIFIED.

1.4 BEST PRACTICE AT ALL TIMES

UNLESS OTHERWISE SPECIFIED OR INDICATED IN THE TENDER DRAWINGS, THE GENERAL LANDSCAPING OPERATIONS SHALL BE EXECUTED IN ACCORDANCE WITH ALL CURRENT RELEVANT AUSTRALIAN STANDARDS.

THE LANDSCAPE SUBCONTRACTOR SHALL FAMILIARISE HIMSELF AND HIS OPERATIVES WITH THE RELEVANT AUSTRALIAN STANDARDS REFERRED TO IN THIS SPECIFICATION AND ANY SUBSEQUENT REVISIONS THEREOF.

WHERE AND TO THE EXTENT THAT MATERIALS, PRODUCTS AND WORKMANSHIP ARE NOT FULLY DETAILED OR SPECIFIED THEY ARE TO BE OF A STANDARD APPROPRIATE TO THE WORKS AND SUITABLE FOR THE PURPOSES STATED IN OR REASONABLY TO BE INFERRED FROM THE PROJECT DOCUMENTS. IN ACCORDANCE WITH BEST PRACTICE LANDSCAPE/HORTICULTURAL PRACTICE.

AGAIN... IF THERE IS ANY DOUBT PLEASE ASK

1.5 KEEP THINGS TIDY

LANDSCAPE CONTRACT TO ENSURE THAT DELIVERY OF AND CONVEYANCE OF MATERIALS (SOILS, EARTH, SAND, GRAVELS, CONCRETE AND LOOSE DEBRIS) THROUGH THE SITE IS DONE SO IN A MANNER THAT WILL PREVENT DROPPING OF MATERIALS ON STREETS, PUBLIC AND PRIVATE AREAS. COVER ALL LOADS TO ENSURE NO LOSS OF LOAD OR DUST. ENSURE THAT THE WHEELS, TRACKS AND BODY SURFACES OF ALL VEHICLES AND PLANT LEAVING THE SITE ARE FREE OF MUD AND THAT MUD IS NOT CARRIED ONTO ADJACENT PAVED STREETS OR OTHER AREAS. A TIDY SITE IS A HAPPY SITE.

1.6 DON'T INHERIT POOR SITE WORKS

BEFORE STARTING EACH NEW TYPE OF SECTION OF WORK, ENSURE THAT PREVIOUS, RELATED WORK IS APPROPRIATELY COMPLETE, IN ACCORDANCE WITH THE PROJECT DOCUMENTS, TO A SUITABLE STANDARD AND IN A SUITABLE CONDITION TO RECEIVE THE NEW LANDSCAPE WORK. NIL VARIATIONS ETC WILL BE CONSIDERED IF ISSUES ARISE FROM ADDITIONAL WORKS BEING REQUIRED TO RECTIFY FAULTS OF OTHER DISCIPLINE'S WORKS.

IF REQUIRED, REMOVE ANY SURPLUS MATERIALS, SPOIL, RUBBISH AND LITTER FROM LANDSCAPE AREAS AS WORK PROGRESSES.

LEAVE SITE IN A CLEAN AND TIDY CONDITION, WITH SOIL/MULCH SWEPT OFF HARD SURFACES AT THE END OF EACH AND EVERY WORKING DAY.

1.7 DELIVERY QUALITY WORKS

OPERATIVES MUST BE APPROPRIATELY SKILLED AND EXPERIENCED AND BE FAMILIAR WITH THE TERMS OF THE SPECIFICATION.

INSPECT PRODUCTS/MATERIALS/STOCK CAREFULLY BEFORE USE AND REJECT ANY WHICH ARE DEFECTIVE.

USE PRODUCTS/MATERIALS ONLY IN THE METHOD AND FOR THE PURPOSE RECOMMENDED BY THE MANUFACTURER.

ENSURE APPROPRIATE QUANTITIES ARE UTILIZED; PROVIDE ADEQUATE MEASURES FOR MIXING AND SPREADING OF ALL PRODUCTS OR MATERIALS.

SET OUT COMPONENTS OR STOCK TO ENSURE CORRECT POSITIONING AND SPACING'S ARE ACHIEVED.

PROTECT FINISHED WORK FROM SUBSEQUENT OPERATIONS AND INTERFERENCE BY OTHERS AS PROJECT PROGRESSES.

LANDSCAPE FOREMAN TO SUPERVISE THE WHOLE OF THE LANDSCAPE WORKS AND BE FAMILIAR WITH ALL LANDSCAPE WORKS AND SCHEDULING OF SCOPE.

1.8 TESTING

THE SUPERINTENDENT MAY REQUIRE MATERIALS, GOODS, WORK OR SAMPLES THEREOF TO BE TESTED TO ENSURE THAT THEY COMPLY WITH THE STANDARDS SPECIFIED. IF THESE TESTS INDICATE THAT THE REQUIRED STANDARDS HAVE NOT BEEN ACHIEVED, THE COSTS OF TESTING AND ANY SUBSEQUENT RE-TESTING ARE TO BE BORNE BY THE LANDSCAPE SUBCONTRACTOR.

2.0 THE WORKS

THE LANDSCAPE SUBCONTRACTOR WILL BE RESPONSIBLE FOR THE CONSTRUCTION OF ALL OF THE HARD AND SOFTSCAPE WORKS AS DETAILED WITHIN THIS PLAN SET UNLESS NOTED OTHERWISE.

2.1 SETOUT

LANDSCAPE CONTRACTOR TO FAMILIARISE THEMSELVES WITH ALL PLANS AND SETOUT WORKS FOR EACH PORTION OF WORKS WITH REFERENCE TO ALL RELEVANT DICIPLINE'S PLANS AND SPECIFICATIONS, NOTING ANY PROPOSED AND OR EXISTING SERVOICES. CHECK THE LEVELS AND DIMENSIONS OF THE SITE AGAINST THOSE SHOWN ON THE DRAWINGS AND RECORD THE RESULTS (AND ANY DISCREPANCIES) ON A COPY OF THE DRAWINGS.

NOTIFY THE SUPERINTENDENT IN WRITING OF ANY DISCREPANCIES AND OBTAIN INSTRUCTIONS BEFORE PROCEEDING.

INFORM SUPERINTENDENT WHEN OVERALL SETTING OUT IS COMPLETE AND BEFORE COMMENCING OPERATIONS.

2.2 SOFTWORKS

SOFTSCAPE WORKS CAN GENERALLY BE SUMMARISED AS COMPRISING THE FOLLOWING:

A. SUB-GRADES CULTIVATED OR PREPARED FOR PLACING TOPSOIL.

B. SUBSOIL DRAINAGE BEFORE TOPSOIL PLACEMENT.

C. TOPSOIL SPREAD BEFORE PLANTING.

D. GRASSING BED PREPARED BEFORE TURFING, SEEDING, OR TEMPORARY GRASSING.

E. PLANT HOLES EXCAVATED AND PREPARED FOR PLANTING PALMS AND LARGE TREES.

F. PLANT SUPPLY SITE DELIVERY AND/OR AGREEMENT OF THEIR PROJECT ACCEPTABILITY (NAMELY PALMS AND LARGE TREES).

G. PLANT MATERIAL SET OUT BEFORE PLANTING.

H. PLANTING, STAKING AND GUYING COMPLETED.

I. GRASSING AREAS COMPLETED.

J. COMPLETION OF PLANTING WORKS AND PLANTING ESTABLISHMENT & MAINTENANCE WORK.

2.3 PLANTING AREAS: INSTALLATION

THERE ARE TWO PRIMARY AREAS THAT WILL RECEIVE SOFTSCAPE PLANTING, THESE ARE 1) AREAS ON NATURAL GROUND (DEEP PLANTING) AND 2) PLANTING WITHIN RAISED PLANTING BEDS OR PODIUMS. THE FOLLOWING PREPARATION NOTES ARE APPLICABLE TO BOTH HOWEVER REFERENCE TO CONSOLIDATION OF SUBGRADE ETC ARE RELEVANT ONLY TO DEEP PLANTING / GENERAL GARDEN BED AREAS ONLY. PODIUM PLANTING BEDS WILL BE SUBJECT TO DRAINAGE WORKS, AND WILL RECEIVE 100% IMPORTED OR IMPROVED SITE SOIL.

2.3.1 GENERAL PLANTING BED AREAS

A. PREPARE PLANTING AREA TO ENSURE APPROPRIATE DEPTH IS ACHIEVED TO RECEIVE SOIL PROFILE AS SPECIFIED: 300MM SOIL IMPORT TO AS4419, AND 100MM MULCH (IE 400MM DEPTH AVG TO PLANTING BEDS TO BE PREPPED PRIOR TO GROWING MEDIUM PROFILE INSTALLATION).

B. CULTIVATE THE SUBGRADE TO 100MM IN DEPTH FOR GENERAL SUBSOIL AND 150MM FOR HEAVY CLAY SOILS AND REMOVE ANY STONE OR ROCK EXCEEDING 50MM IN DIAMETER AS WELL AS ANY ORGANIC MATERIAL SUCH AS ROOTS STICK CLODS OR WEEDS (BROUGHT IN THROUGH EXCAVATION PROCESS). IN GENERAL, REMOVE ANY ALL MATERIAL OR DEBRIS THAT WOULD BE DETRIMENTAL TO PLANT HEALTH.

C. INSTALL SOIL IMPORTED GROWING MEDIUM: SOIL MIXTURE THAT IS BROUGHT ONTO SITE FROM AN APPROVED AND ACCREDITED GROWING MEDIA SUPPLIER AND ADHERE TO ALL RELEVANT AUSTRALIAN STANDARDS AS4419. INSTALL SOIL TO A DEPTH OF 300MM AS PER TYPICAL DETAIL THIS DOCUMENT.

C. INSTALL MULCH AS SPECIFIED TO A DEPTH OF 100MM. ENSURE MULCH IS PLACED MINIMUM 500MM FROM PLANT STEMS. MULCH SHOULD BE PROFILED GENERALLY AS ILLUSTRATED TO CREATE A 'WELL' AROUND THE PLANT STOCK TO PROMOTE WATER RETENTION. ENSURE PLANTS ARE PLACED AS PER SPECIFIED DENSITIES AT EVEN SPACINGS TO ACHIEVE DENSITIES AS STATED. REFER TO MULCH SPECIFICATION THIS DOCUMENT.

D. INSTALL PLANTING WORKS: PLANT TYPE, SIZE, DENSITIES AND LOCATION AS SPECIFIED ON PLANS AND PLANTING SCHEDULES. REFER TO PLANTING QUALITY STANDARDS AS SPECIFIED.

E. ENSURE MINIMUM OFFSET OF 500MM FROM ANY PATHWAYS, FENCE LINES, FOOTINGS ETC OR AS SPECIFIED IN THIS DOCUMENT

F. INSTALL SLOW RELEASE FERTALISER IN LINE WITH BEST PRACTICE OR AS SPECIFIED IN THIS DOCUMENT.

2.3.2 STREET TREE PLANTING WORKS

A. EXCAVATE HOLE TO MINIMUM 2X WIDTH AND 2X DEPTH OF ROOTBALL.

B. CULTIVATE THE SURROUNDING SUBGRADE TO 200MM IN DEPTH AND REMOVE ANY STONE OR ROCK EXCEEDING 50MM IN DIAMETER AS WELL AS ANY ORGANIC MATERIAL SUCH AS ROOTS STICK CLODS OR WEEDS (BROUGHT IN THROUGH EXCAVATION PROCESS). IN GENERAL, REMOVE ANY ALL MATERIAL OR DEBRIS THAT WOULD BE DETRIMENTAL TO PLANT HEALTH.

HOLD POINT: A TREE HOLE INSPECTION WILL BE REQUIRED PRIOR TO INSTALL OF TREES UNLESS STATED OTHERWISE. ENSURE LIAISON WITH PROJECT MANAGER OR LANDSCAPE SUPERINTENDENT / ARCHITECT PRIOR TO PROCEEDING WITH PLANTING WORKS.

C. INSTALL PLANTING WORKS: TREE TYPE, SIZE AND LOCATION AS SPECIFIED ON PLANS AND PLANTING SCHEDULES.

D. BACKFILL TREE HOLE WITH SOIL AS SPECIFIED. SOIL SHALL COMPLY WITH AS4419-2003 - INSTALL SLOW RELEASE FERTALISER IN LINE WITH BEST PRACTICE OR AS SPECIFIED IN THIS DOCUMENT.

E. INSTALL MULCH COLLAR. THIS IS TYPICALLY TO BE MINIMUM 500MM RADIUS UNLESS OTHERWISE STATED ON PLANS AND IS TO BE AT A DEPTH OF 100MM. ENSURE MULCH IS PLACED MINIMUM 100MM FROM TREE STEM TO PREVENT COLLAR ROT. MULCH SHOULD BE PROFILED GENERALLY AS ILLUSTRATED TO CREATE A 'WELL' AROUND THE TREE TO PROMOTE WATER RETENTION. REFER TO MULCH SPECIFICATION THIS DOCUMENT.

F. STAKE TREES AS SPECIFIED: STAKES TO BE 1800 X 50 X 50MM WITH 600MM INTO GROUND ENSURING 1200MM REMAINS ABOVE GROUND. ENSURE STAKES ARE CLEAR OF ROOT BALL.

G. TIE TREE TO STAKES WITH 50MM HESSIAN OR RUBBERISED BLACK PVC IN A FIGURE OF EIGHT. ENSURE NURSERY STAKES ARE REMOVED.

H. INSTALL ROOT GUARD TO DEPTH 1200MM. REFER TO SPECIFICATION FOR TYPE. AS PER DETAIL, ROOT GUARDS ARE TYPICALLY PLACED TO REAR OF KERB HOWEVER MAY BE SPECIFIED TO ADDITIONAL AREAS AS DETERMINED BY PROXIMITY TO SERVICES ETC. REFER TO TO SETOUT PLAN FOR CONFIRMATION OF LOCATION.

2.4 STREET TREE ADDITIONAL REQUIREMENTS

IMPORTANT: TREES ARE TO ABIDE BY RELEVANT COUNCIL TREE STOCK REQUIREMENT STANDARDS. THESE STANDARDS WILL BE REVIEWED AT FORMAL TREE HOLE INSPECTION WITH COUNCIL ASSESSING OFFICER. THESE ARE DETAILED WITHIN THE ASSOCIATED SPECIFICATIONS AND CAN GENERALLY BE SUMMARISED AS:

ALL TREES HOLES MARKED OUT IN ACCORDANCE WITH APPROVAL AND COMPLY WITH ALL COUNCIL STANDARD OFFSETS

TREE HOLE DIMENSIONS AND PREPARATION PARAMETERS ARE AS PER THOSE STATED ABOVE

TREE HOLES DO NOT IMPACT ON SERVICES OR OTHER INFRASTRUCTURE

ALL TREES ARE AS PER NATSPEC SPECIFICATIONS INCLUDING CORRECT FORM AND STRUCTURE,

STREET TREES AND FEATURE TREES TO HAVE A MINIMUM 900MM TREE TRUNK AND BE 2000MM IN HEIGHT AT TIME OF PLANTING

THE SUPERINTENDENT HAS THE RIGHT TO REJECT ANY PLANTS NOT MEETING THE REQUIREMENTS OF THE SPECIFICATION AND SCHEDULE.

STORE PLANTS SO THEY OF THEIR CONTAINERS WILL NOT BE DAMAGED. WATER AND MAINTAIN ALL PLANTS AS NECESSARY. PROVIDE ALL LIFTING EQUIPMENT FOR STOCK DELIVERED TO SITE. INSPECT STOCK WITH THE SUPERINTENDENT AND THE CONTRACT SUPPLIER ONCE THE STOCK HAS ARRIVED ON SITE PRIOR TO UNLOADING.

PROTECTION: PREVENT PLANT STOCK FROM DAMAGE. INSPECT ALL STOCK FOR DISEASE AND PESTS. REPORT ON RECOVERY SUCCESS AND GIVE NOTICE OF SITE PLANT STOCK, WHICH WILL NOT RECOVER FROM RELOCATION.

REPLACEMENT: REPLACE DAMAGED OR FAILED PLANTS WITH PLANTS OF THE SAME TYPE AND SIZE.

2.5 TURF AREAS: INSTALLATION

OBTAIN TURF FROM A SPECIALIST GROWER OF CULTIVATED TURF. AREAS DESIGNATED AS "TURF" ON DRAWINGS SHALL BE FRESHLY CUT AND OF THE FOLLOWING SPECIFICATION: GRADE A COUCH.

TURF TO BE FREE FROM NUTGRASS OR OTHER NOXIOUS WEEDS OR ANY OTHER MATERIAL DELETERIOUS TO PLANT GROWTH.

DELIVER THE TURF WITHIN 24 HOURS OF CUTTING, AND LAY IT WITHIN 36 HOURS OF CUTTING. PREVENT IT FROM DRYING OUT BETWEEN CUTTING AND LAYING.

PREPARE TURF AREAS 100MM BELOW DESIGNED FINISH LEVEL TO ALLOW 75MM SOIL UNDERLAY AND 25MM ROLL TURF.

CULTIVATE THE SURROUNDING SUBGRADE TO A FURTHER 100MM IN DEPTH AND REMOVE ANY STONE OR ROCK EXCEEDING 50MM IN DIAMETER AS WELL AS ANY ORGANIC MATERIAL SUCH AS ROOTS STICK CLODS OR WEEDS (BROUGHT IN THROUGH EXCAVATION PROCESS). IN GENERAL, REMOVE ANY ALL MATERIAL OR DEBRIS THAT WOULD BE DETRIMENTAL TO TURF HEALTH.

SUBGRADE TO BE EVALUATED ON SITE TO ASSESS PERMEABILITY AND GENERAL TYPE TO EVALUATE REQUIREMENT FOR ADDITIONAL DRAINAGE WORKS AND OR CULTIVATION WORKS TO ENSURE NIL ADVERSE IMPACTS ON TURF HEALTH.

INSTALL TURF UNDERLAY AT DEPTH OF 75MM. TURF UNDERLAY TO BE AS BE SOIL IMPORT SPECIFICATION UNLESS STATED OTHERWISE.

BEFORE LAYING TURF, APPLY FERTILISER OF 14:15:10 N.P.K. OR APPROVED SIMILAR COMPOSITION AT THE RATE OF 100G PER M2 AND RAKE INTO THE PREPARED SOIL.

LAY THE TURF IN STRETCHER PATTERN WITH THE JOINTS STAGGERED AND CLOSE BUTTED. LAY PARALLEL WITH THE LONG SIDES OF LEVEL AREAS, AND WITH CONTOURS ON SLOPES. CLOSE BUTT THE END JOINTS AND SPACE THE STRIPS 300 MM APART. APPLY A LAYER OF TOP DRESSING BETWEEN THE STRIPS OF TURF. FINISH WITH AN EVEN SURFACE. LIGHTLY TAMP TO AN EVEN SURFACE IMMEDIATELY AFTER LAYING.

WATER IMMEDIATELY AFTER LAYING UNTIL THE TOPSOIL IS MOISTENED TO ITS FULL DEPTH. CONTINUE WATERING TO MAINTAIN MOISTURE TO THIS DEPTH. KEEP THE GRASS IN A HEALTHY WEED FREE CONDITION. REFER SECTION 12.10.3 FOR WATERING REGIME.

MOW TO MAINTAIN THE GRASS HEIGHT WITHIN THE REQUIRED RANGE. DO NOT REMOVE MORE THAN ONE THIRD OF THE GRASS HEIGHT AT ANY ONE TIME. CARRY OUT THE LAST MOWING WITHIN 7 DAYS BEFORE THE END OF THE PLANTING ESTABLISHMENT PERIOD. REMOVE GRASS CLIPPINGS FROM THE SITE AFTER EACH MOWING.

WHEN THE TURF IS ESTABLISHED, MOW CLOSELY, REMOVE CUTTINGS AND LIGHTLY TOP DRESS TO A DEPTH OF 10MM WITH AN APPROVED TOP DRESS SOIL. WORK THE DRESSING WELL INTO THE JOINTS AND CORRECT ANY UNEVENNESS IN THE TURF SURFACE.

2.6 TURF AREAS: INSTALLATION (ARTIFICIAL)

ARTIFICIAL TURF TO BE INSTALLED AS PER MANUFACTURERS SPECIFICATIONS. DIRECT STICK DOWN PERMITTED IN INSTANCES WHERE CONCRETE PAD HEIGHT IS AT APPROVED FFL, IDENTIFY ANY CONFLICTS WITH MANUFACTURERS RECOMMENDATIONS AND ASSOCIATED WARRANTIES IF DIRECT STICK IS PROPOSED. IN INSTANCES WHERE SUBGRADE IS TO BE INSTALLED, THIS IS TO BE AS PER MANUFACTURERS RECOMMENDATIONS, GENERALLY DESCRIBED AS COMPACTED CRUSHER DUST (FINELY GRADED CRUSHED BLUE STONE) OR ROAD BASE.

2.7 DRAINAGE

THE LANDSCAPE SUBCONTRACTOR IS TO PROVIDE FOR SUFFICIENT SURFACE AND SUB-SURFACE DRAINAGE TO GARDEN AND GRASS AREAS TO ENSURE ADEQUATELY DRAINED SOFT LANDSCAPED AREAS FREE FROM SURFACE PONDING WATER AND HEAVY WATERLOGGED SOILS. SURFACE AND SUB-SURFACE DRAINAGE IS TO AID IN THE HEALTHY GROWTH AND CONTINUED THRIVING OF ALL PLANT STOCK AND GRASS AREAS.

COMPLY WITH THE RELEVANT AUSTRALIAN STANDARDS TO THE EXTENT THAT THEY ARE RELEVANT AND NOT OVER-RIDDEN BY THE SPECIFICATION.

SURFACE DRAINAGE

WHEN SETTING OUT LINES AND LEVELS OF GARDENS AND TURFED AREAS, ENSURE THE ACCURATE FORMATION OF GRADES AND CROSS FALLS LEADING TO SURFACE CATCH DRAINS AND FIELD INLETS; SO ENABLING THE AREAS TO DRY QUICKLY AND SURPLUS WATER TO REACH THE DRAINAGE SYSTEM IN SUCH A WAY THAT POTENTIAL EROSION CHANNELS AND/OR WET SPOTS ARE AVOIDED.

MINIMUM SURFACE CROSS FALLS TOWARDS DRAINS AND OUTFALLS UNLESS OTHERWISE STATED SHALL BE AS FOLLOWS:

MULCHED GARDEN AREAS 1:40

TURFED AREAS 1:80

3.0 MATERIAL SPECIFICATIONS

3.1 IMPORTED SOILS

UNLESS SPECIFIED OTHERWISE OR AGREED TO BY THE LANDSCAPE ARCHITECT AND PROJECT SUPERVISOR, ALL SOIL IN GENERAL PLANTING WORKS IS TO BE IMPORTED PREMIUM GRADE TOPSOIL FOR ALL NEW PLANTING AREAS TO COMPLY WITH AS 4419 (1998).

3.2 IMPROVED SITE SOIL

IN THE EVENT THAT IMPROVED SITE SOIL HAS BEEN SPECIFIED OR DETERMINED FOR USE WITHIN ALL OR ANY LANDSCAPE WORKS THIS MUST BE TESTED, IMPROVED IN LINE WITH RELEVANT AUSTRALIAN STANDARDS AND INDUSTRY BEST PRACTICE METHODOLOGY.

3.3 MULCH

PROVIDE MULCH WHICH IS FREE OF DELETERIOUS AND EXTRANEOUS MATTER SUCH AS SOIL, WEEDS AND STICKS TO AS 4454.

ORGANIC MULCH: MULCH TO BE FOREST FINES ORGANIC MULCH 15MM CHIP.

MATERIAL NOT PERMITTED: LEAF AND PLANT MATTER FROM ANY OTHER SPECIES (ESPECIALLY WEED SPECIES SUCH AS PRIVET, CAMPHOR LAUREL, CORAL TREE, POPLAR, WILLOW, PINE AND OTHER NOXIOUS WEEDS). NIL TIP MULCH AT ANY TIME TO BE USED.

3.4 TURF

OBTAIN TURF FROM A SPECIALIST GROWER OF CULTIVATED TURF.

AREAS DESIGNATED AS "TURF" ON DRAWINGS SHALL BE FRESHLY CUT AND OF THE FOLLOWING SPECIFICATION: GRADE A COUCH

TURF TO BE FREE FROM NUTGRASS OR OTHER NOXIOUS WEEDS OR ANY OTHER MATERIAL DELETERIOUS TO PLANT GROWTH.

3.4.1 ARTIFICIAL TURF

URBAN TURF SOLUTIONS OR SIMILAR APPROVED TO MANUFACTURERS RECOMMENDATION

3.5 PLANTS

PLANT MATERIAL QUALITY SPECIFICATION - NURSERY STOCK

ALL PLANTS SHALL BE TRUE TO SCHEDULED NOMENCLATURE, WELL FORMED, HARDENED OFF AND DISEASE-FREE NURSERY STOCK. THEY SHALL BE CONTAINER GROWN IN POTTING SOIL WITH ROOT SYSTEM FIRMLY ESTABLISHED BUT WITH NO LARGE ROOTS GROWING OUT OF THE CONTAINER. NO PLANT SHALL BE POT BOUND.

ALL TREES SUPPLIED SHALL COMPLY WITH NATSPEC'S "SPECIFYING TREES: A GUIDE TO ASSESSMENT OF TREE QUALITY"

THE CONDITION OF PLANT STOCK SHALL BE SUCH THAT FUTURE GROWTH SHALL BE STRONG AND TYPICAL OF THE SPECIES. STOCK THAT SHOWS SIGNS OF LATENT CONDITIONS EVIDENT OF DEFECTIVE NURSERY PRACTICES (SUCH AS 'SPIRALING') SHALL BE DEEMED UNACCEPTABLE.

ALL PLANTS SHALL BE GROWN IN ACCORDANCE WITH NURSERY ASSOCIATION STANDARDS. CORRECT NURSERY / GROWING PRACTICES SHALL HELP TO ENSURE THE LONG-TERM HEALTH AND VIABILITY OF THE PLANT STOCK ON SITE AFTER PLANTING.

ENSURE THAT TRUNKS AND BRANCHES ARE FREE OF DIEBACK, CAVITIES, SUNBURN AND SECRETIONS. TRUNK AND BRANCHES ARE TO BE EVENLY TAPERED AND TEXTURED TYPICAL OF THE SPECIE. PLANT MATERIAL IS TO BE MATURED ENOUGH TO SUPPORT THEMSELVES WITHOUT STAKING. BRANCHES SHOULD BE EVENLY DISTRIBUTED, EXHIBIT A FULL WELL-FORMED CANOPY THAT OCCUPIES A MINIMUM 1/3 OF THE OVERALL CURRENT HEIGHT. SPECIMENS ARE TO BE PREPARED FOR THEIR INTENDED PURPOSE.

FOLIAGE SHALL BE EVENLY DISTRIBUTED ACROSS THE CROWN IN PROPORTION TO THE BRANCHING STRUCTURE AS WELL AS BE OF A TRUE COLOUR TYPICAL OF THE SPECIE, DENSE AND OF GOOD SIZE. ENSURE FOLIAGE IS FREE OF DEFICIENCIES AND BURN.

AT THE TIME OF THE LAST PLANT STOCK REVIEW PRIOR TO SITE DELIVERY, PLANT MATERIAL IS TO CONFORM WITH THE SPECIFIED MINIMUM PLANT SIZES IN THE PLANT SCHEDULE. PLANTS SHALL NOT EXHIBIT SIGNS OF HAVING BEEN STRESSED AT ANY STAGE DURING THEIR DEVELOPMENT DUE TO INADEQUATE WATERING, EXCESSIVE SHADE/SUNLIGHT, SUFFERED PHYSICAL DAMAGE OR HAVE RESTRICTED HABIT DUE TO GROWTH IN NURSERY ROWS.

ALL TREES ARE AS PER NATSPEC SPECIFICATIONS INCLUDING CORRECT FORM AND STRUCTURE,

STREET TREES AND FEATURE TREES TO HAVE A MINIMUM 900MM TREE TRUNK AND BE 2000MM IN HEIGHT AT TIME OF PLANTING

THE SUPERINTENDENT HAS THE RIGHT TO REJECT ANY PLANTS NOT MEETING THE REQUIREMENTS OF THE SPECIFICATION AND SCHEDULE.

STORE PLANTS SO THEY OF THEIR CONTAINERS WILL NOT BE DAMAGED. WATER AND MAINTAIN ALL PLANTS AS NECESSARY. PROVIDE ALL LIFTING EQUIPMENT FOR STOCK DELIVERED TO SITE. INSPECT STOCK WITH THE SUPERINTENDENT AND THE CONTRACT SUPPLIER ONCE THE STOCK HAS ARRIVED ON SITE PRIOR TO UNLOADING.

PROTECTION: PREVENT PLANT STOCK FROM DAMAGE. INSPECT ALL STOCK FOR DISEASE AND PESTS. REPORT ON RECOVERY SUCCESS AND GIVE NOTICE OF SITE PLANT STOCK, WHICH WILL NOT RECOVER FROM RELOCATION.

REPLACEMENT: REPLACE DAMAGED OR FAILED PLANTS WITH PLANTS OF THE SAME TYPE AND SIZE.

3.6 FERTILISER

PROVIDE PROPRIETARY FERTILISERS, DELIVERED TO THE SITE IN SEALED BAGS MARKED TO SHOW MANUFACTURER OR VENDOR, WEIGHT, FERTILISER TYPE, N:P:K RATIO, RECOMMENDED USES AND APPLICATION RATES. STORE IN A DRY SECURE ENVIRONMENT. APPLY ACCORDING TO MANUFACTURER'S RECOMMENDATIONS (RATE/REAPPLICATION/WATERING).

A. GARDEN BEDS SLOW RELEASE

OSMOCOTE OR SIMILAR APPROVED TO MANUFACTURERS RECOMMENDATION

B. TREE PLANTINGS

OSMOCOTE OR SIMILAR APPROVED TO MANUFACTURERS RECOMMENDATION

C. GRASSING

GROWFORCE 301 OR SIMILAR APPROVED 100KG/HA

3.7 STAKES & TIES

A. STAKES

MATERIAL: HARDWOOD, STRAIGHT, FREE FROM KNOTS OR TWISTS, POINTED AT ONE END.

INSTALLATION: DRIVE STAKES INTO THE GROUND AT LEAST ONE THIRD OF THEIR LENGTH, AVOIDING DAMAGE TO THE ROOT SYSTEM.

STAKE SIZES:

FOR PLANTS > 2.5 M HIGH: THREE 50 X 50 X 2400 MM STAKES PER PLANT.

FOR PLANTS 1 - 2.5 M HIGH: TWO 50 X 50 X 1800 MM STAKES PER PLANT.

FOR PLANTS < 1 M HIGH: ONE 38 X 38 X 1200 MM STAKE PER PLANT.

B. TIES

TIES SHALL BE 50MM WIDE HESSIAN WEBBING OR 25MM WIDE HEAVY-DUTY POLYTHENE STRIPS. (PLASTIC COATED TIES ARE NOT ACCEPTABLE). FIX TIES IN A FIGURE OF EIGHT PATTERN AND STAPLE TO STAKE WITH GALVANISED WIRE STAPLES. IN CASES WHERE STRONG TIES ARE REQUIRED PAST THE MAINTENANCE PERIOD, 50MM UV STABILISED WOVEN POLYPROPYLENE TIES SHOULD BE USED.

4.0 MAINTENANCE

4.1 CERTIFICATION AND WARRANTIES

LANDSCAPE CONTRACTOR TO PROVIDE ALL RELEVANT MAINTENANCE LOGS, CERTIFICATION DOCUMENTS (PLAYGROUND WARRANTIES, CERTIFICATIONS, SPARE PARTS MANUALS, FORM 16 ETC) MANUFACTURERS WARRANTIES, SOIL CERTIFICATIONS, FIRE ANT CERTIFICATION TO THE LANDSCAPE ARCHITECT FOR INCLUSION IN AS CONSTRUCTED DOCUMENTATION. THIS IS REQUIRED AT MINIMUM 2 MONTHS PRIOR TO ON MAINTENANCE INSPECTION. KEEP A LOGBOOK RECORDING ACCORDING TO WEEKLY CYCLES WHEN AND WHAT MAINTENANCE WORK HAS BEEN DONE AND WHAT MATERIALS, INCLUDING TOXIC MATERIALS, HAVE BEEN USED. MAKE THE LOGBOOK AVAILABLE FOR INSPECTION ON REQUEST.

4.2 GENERAL MAINTENANCE REQUIREMENTS

PLEASE NOTE THE TERM 'MAINTENANCE' THROUGHOUT THE BELOW PERTAINS TO WORKS UNDERTAKEN WITHIN THE ENTIRE ESTABLISHMENT AND MAINTENANCE PHASES.

THE LANDSCAPE SUBCONTRACTOR SHALL MAINTAIN THE WHOLE OF THE GRASSED AND PLANTED AREAS IN A MANNER WHICH ENSURES THE ESTABLISHMENT OF HEALTHY AND VIGOROUS PLANTS AND A CLOSE TEXTURED, WEED FREE AND WHICH CREATES A TIDY WEED FREE APPEARANCE. ALLOWANCE SHALL BE MADE IN PRICING FOR WATERING TO MAINTAIN ALL SUBJECTS IN A HEALTHY MOIST CONDITION TO FACILITATE OPTIMUM CONDITIONS FOR EARLY ESTABLISHMENT.

THROUGHOUT THE PLANTING ESTABLISHMENT PERIOD, CARRY OUT MAINTENANCE WORK INCLUDING, WATERING, MOWING, EDGING, WEEDING, RUB