YOUR NEW HOME PROPOSAL

CLIENT NAME - QLD READYBUILT

JOB ADDRESS - LOT 142, CALLI AVENUE
- UPPER COOMERA

JOB NUMBER - 704031

READY BUILT
by Plantation Homes

PMT

FINAL DRAWINGS

CHECKED BY: JL EXT No.
CHECKED TO:
DATE: 24/10/24

NOTE TO CONCRETOR - FINISHED LEVEL OF PAD FOOTING IS CRITICAL FOR STEEL POST LENGTH. TOP OF FOOTING MUST BE LEVELWITH NOMINATED HOUSE PLATFORM LEVEL.

APPROX. CUT : 1250mm APPROX
APPROX. FILL : 250MM APPROX

RL'S ARE INDICATION ONLY. SOME LEVELS MAY CHANGE DUE TO ACTUAL CONDITIONS ON SITE.

LOCATION OF SERVICES IS ONLY APPROXIMATE AND MAY VARY DUE TO SITE CONDITIONS.

THIS IS AN APPROXIMATE EVEN CUT AND FILL.

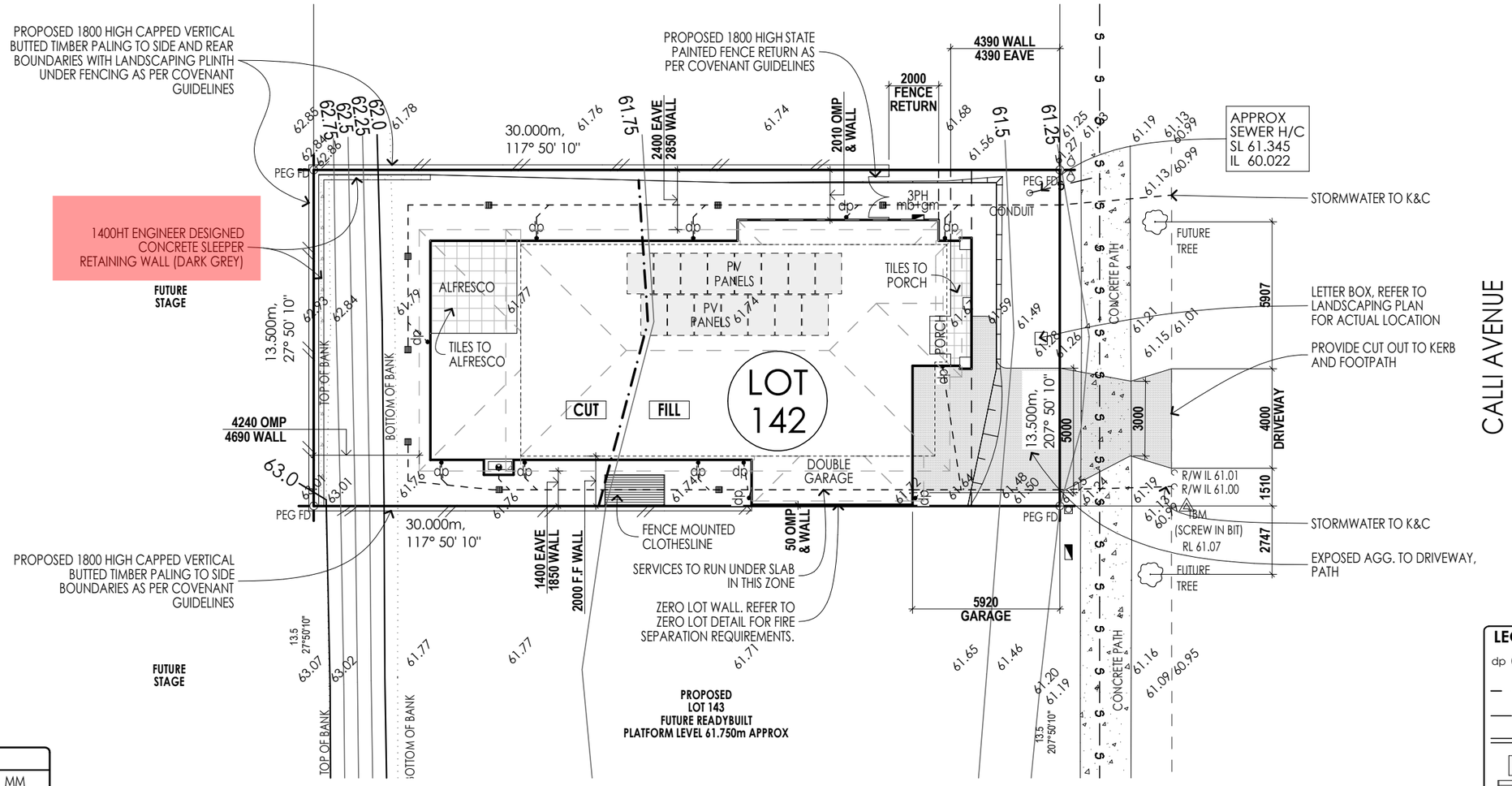

TREE LEGEND

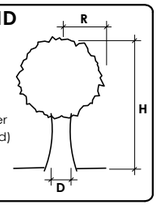

D = Trunk Diameter
R = Radius (Spread)
H = Tree Height

LEGEND

- dp — PVC DOWNPIPE WITH MAX. GUTTER LENGTH OF 12.0m PER DOWNPIPE (UNLESS NOTED OTHERWISE)
- 100mm DIA UPVC S.W.D. LAID AT 1:100 INCLUDING UNDER SLAB/PAVED AREA'S
- MOUNTABLE KERB
- NON-MOUNTABLE KERB
- YARD GULLY GRATE (FINAL LOCATION DETERMINED ON SITE)
- FOLDING CLOTHESLINE (BY BUILDER)

FINISHED LEVELS TABLE

Pod Slab Freeboard	300	MM
Building Platform	61.750	Approx. R.L
Ground Floor FFL	62.050	Approx. R.L
First Floor FFL	64.962	Approx. R.L
Garage FFL	62.050	Approx. R.L
Porch FFL	61.980	Approx. R.L
Alfresco FFL	61.980	Approx. R.L

PROVIDE EARTHWORKS REQUIRED TO ACHIEVE BUILDING PLATFORM LEVELS NOMINATED

ATTENTION EARTHMOVER:
SITE BENCH TO BE AT THE SAME LEVEL.
ALFRESCO & PORCH STEPDOWNS TO BE ACHIEVED USING REDUCED HEIGHT PODS

SERVICES LEGEND

- O/H POWER
- U/G POWER
- WATER
- TELSTRA
- GAS — GAS — GAS
- SEWER — S — S — S
- ROOFWATER — RW — RW — RW
- STORMWATER — SW — SW — SW

BY: TQC | ISSUED: 03/11/2024 | REV: 10

© HENLEY ARCH P/L
ALL RIGHTS RESERVED. THIS SET OF DRAWINGS IS COPYRIGHT. APART FROM ANY FAIR DEALING AS PERMITTED UNDER THE COPYRIGHT ACT NO PART MAY BE USED, REPRODUCED OR COPIED BY ANY MEANS OR IN ANY FORM WITHOUT PRIOR PERMISSION OF HENLEY ARCH P/L.
THERE IS NO COPYRIGHT LICENCE, EXPRESS OR IMPLIED, GRANTED WITH RESPECT TO THESE DRAWINGS. ONLY HENLEY ARCH P/L OR ITS SUBSIDIARIES MAY BUILD A HOUSE WHICH REPRODUCES THESE DRAWINGS.

THE SIGNED FINAL DRAWINGS WILL TAKE PRECEDENCE AND WILL DIFFER FROM THE DISPLAY HOME DRAWINGS AND THE SIGNED CONTRACT DRAWINGS GIVEN ON GOING PRODUCTION CHANGES.

SITE PLAN | 1A | LH | Abington 345-D37 | Watego

SITE COVERAGE ANALYSIS

BUILDING	201.0 sqm	49.6 %
SITE AREA	405.0 sqm	100.0 %

SCALE	1:200, 1:500, 1:1
DATE DRN	21/08/2024
DRAWN BY	PV
JOB NUMBER	704031
HSE/FCD NO	9716-WGO
MAP REF	#REF

CLIENT: **QLD READYBUILT**
LOT 142, CALLI AVENUE
UPPER COOMERA

OWNER ..... / /
BUILDER ..... / /

* ALL PLATFORMS FOR DOUBLE STOREY MUST BE A MINIMUM OF 2000 WIDE.
* ALL CUT BATTERS MUST BE A MINIMUM OF 45 DEG FOR CLAY SITES OR 30 DEG FOR SANDY SITES.
* ALL FILL BATTERS MUST BE A MINIMUM OF 35 DEG.
* SOIL EROSION AND SEDIMENT CONTROL MEASURES SHALL BE INSTALLED IN ACCORDANCE WITH COUNCIL SOIL EROSION AND SEDIMENT CONTROL POLICY.
* FINISHED GROUND LEVEL AROUND GARAGE IS TO BE 150mm MINIMUM BELOW GARAGE FFL.
* FINAL POSITION OF METER-BOX SHALL BE DETERMINED ON SITE BY LOCATION OF POWER CONNECTION POINT.
* THIS SURVEY MAPS THE SITE FEATURES AND LEVELS. IT DOES NOT GUARANTEE THE POSITION OF PEGS, ALLOTMENT BOUNDARIES OR FENCES.
* CONCRETER TO ENSURE DRIVEWAY CROSSOVERS ARE INSTALLED TO COMPLY WITH RELEVANT COUNCIL STANDARDS/APPROVAL.
* PROVIDE TERMITE PROTECTION IN ACCORDANCE WITH A.S.3660.1.

SURVEY PLAN: SP313554
LOCAL AUTH: GOLDEN COAST CITY COUNCIL
NCC: 2022

READY BUILT by Plantation Homes
A DIVISION OF HENLEY PROPERTIES (QLD) PTY LTD
3354 PACIFIC HIGHWAY, SPRINGWOOD
Ph: (07) 3290 8888 Fax: (07) 3290 8899

STUD GRADE, AND QUANTITY BY CUTTING GUIDE / PRE-FAB SUPPLIER

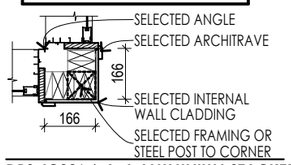

DRS_IC006 | A&L ALUMINIUM STACKER DOORS

PROVIDE R2.5 WALL BATTS TO INTERNAL WALLS AS INDICATED ON PLAN.

PMT

FINAL DRAWINGS

CHECKED BY: JL EXT No.
CHECKED TO:
DATE: 24/10/24

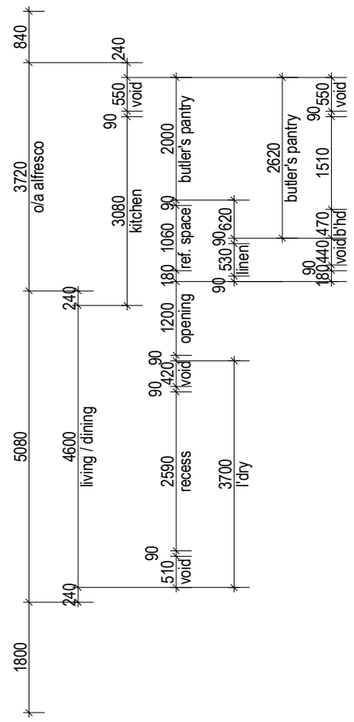

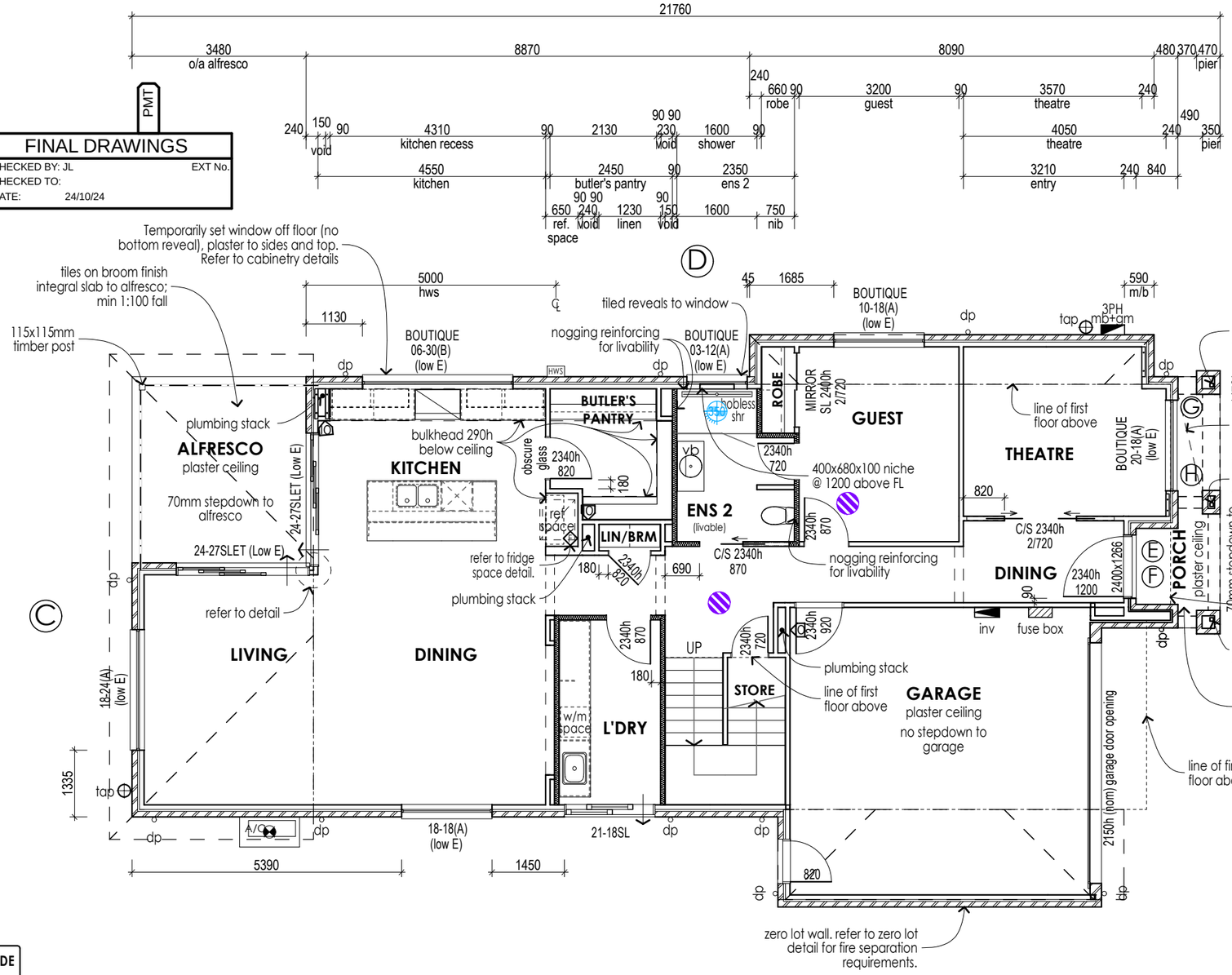
21760
3480 o/a alfresco
8870
8090
480 370 470 pier
240
660 90 robe
3200 guest
90
3570 theatre
240
240 150 90 4310 kitchen recess
90 2130
90 90 230 void
1600 shower
90
4050 theatre
490
240 350 pier
240 150 90 void
4550 kitchen
2450 butler's pantry
90 2350 ens 2
3210 entry
240 840
650 ref. space
90 90 240 void
1230 linen
90 150 void
1600
750 nib
D
Temporarily set window off floor (no bottom reveal), plaster to sides and top. Refer to cabinetry details
tiles on broom finish integral slab to alfresco; min 1:100 fall
115x115mm timber post
5000 hws
1130
45 1685
590 m/b
BOUTIQUE 10-18(A) (low E)
BOUTIQUE 06-30(B) (low E)
BOUTIQUE 03-12(A) (low E)
nogging reinforcing for livability
tiled reveals to window
dp
tap
3PH mb+gm
75mm SHS corner adjustable post to pier
plumbing stack
ALFRESCO
plaster ceiling
70mm stepdown to alfresco
24-27SLET (Low E)
bulkhead 290h below ceiling
obscure glass
2340h 820
180
BUTLER'S PANTRY
KITCHEN
ref space
LIN/BRM
2340h 820
180
690
refer to fridge space detail.
plumbing stack
vb
ROBE
MIRROR SL 2400h 2/720
hobless shr
2340h 720
400x680x100 niche @ 1200 above FL
ENS 2
(livable)
2340h 870
C/S 2340h 870
nogging reinforcing for livability
GUEST
line of first floor above
THEATRE
820
C/S 2340h 2/720
BOUTIQUE 20-18(A) (low E)
DINING
2340h 1200
2400x1266
inv
fuse box
PORCH
plaster ceiling
70mm stepdown to porch
open above
75mm SHS intermediate adjustable post with wide cleat to pier
line of first floor above
75mm SHS corner adjustable post to pier
tiles on broom finish integral slab to porch; min 1:100 fall
line of first floor above
C
LIVING
DINING
refer to detail
18-24(A) (low E)
1335
tap
A/C
dp
18-18(A) (low E)
21-18SL
5390
1450
2340h 870
UP
2340h 720
2340h 920
180
STORE
w/m space
L'DRY
plumbing stack
line of first floor above
GARAGE
plaster ceiling
no stepdown to garage
2150h (nom) garage door opening
820
zero lot wall. refer to zero lot detail for fire separation requirements.
A
240 840
240
3060 ens
1730 robe
945 90
3900 guest
3390 theatre
2550 theatre
3030
120
470 720
1925
470 pier
1045 90
90
1130 90 opening
1640 entry
1520
240 90 240 90 240 90

PMT

FINAL DRAWINGS

CHECKED BY: JL EXT No.
CHECKED TO:
DATE: 24/10/24

PROVIDE R2.5 WALL BATTS TO INTERNAL WALLS AS INDICATED ON PLAN.

WINDOW HEAD HEIGHT SCHEDULE

CODE	TOP OF ALUMINIUM
A	2236
B	1499
S	2275

* HEAD HEIGHTS TO GARAGE WINDOWS ARE TO BE MEASURED FROM GARAGE FLOOR LEVEL.
* ALL WINDOWS WITH A "DG" AT THE END OF THE CODE ARE DOUBLE GLAZED.
* ALL WINDOWS WITH A "BS" AT THE END OF THE CODE TO HAVE A BARRIER SCREEN.
* ALL WINDOWS SIZE CODES ARE NOMINAL.

BULKHEADS 290mm BELOW CEILING UNLESS NOTED OTHERWISE.

ALL LIVABILITY REQUIREMENTS TO COMPLY WITH ABCB STANDARD FOR LIVABLE HOUSING DESIGN.

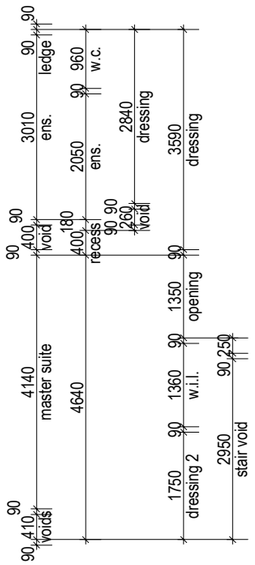

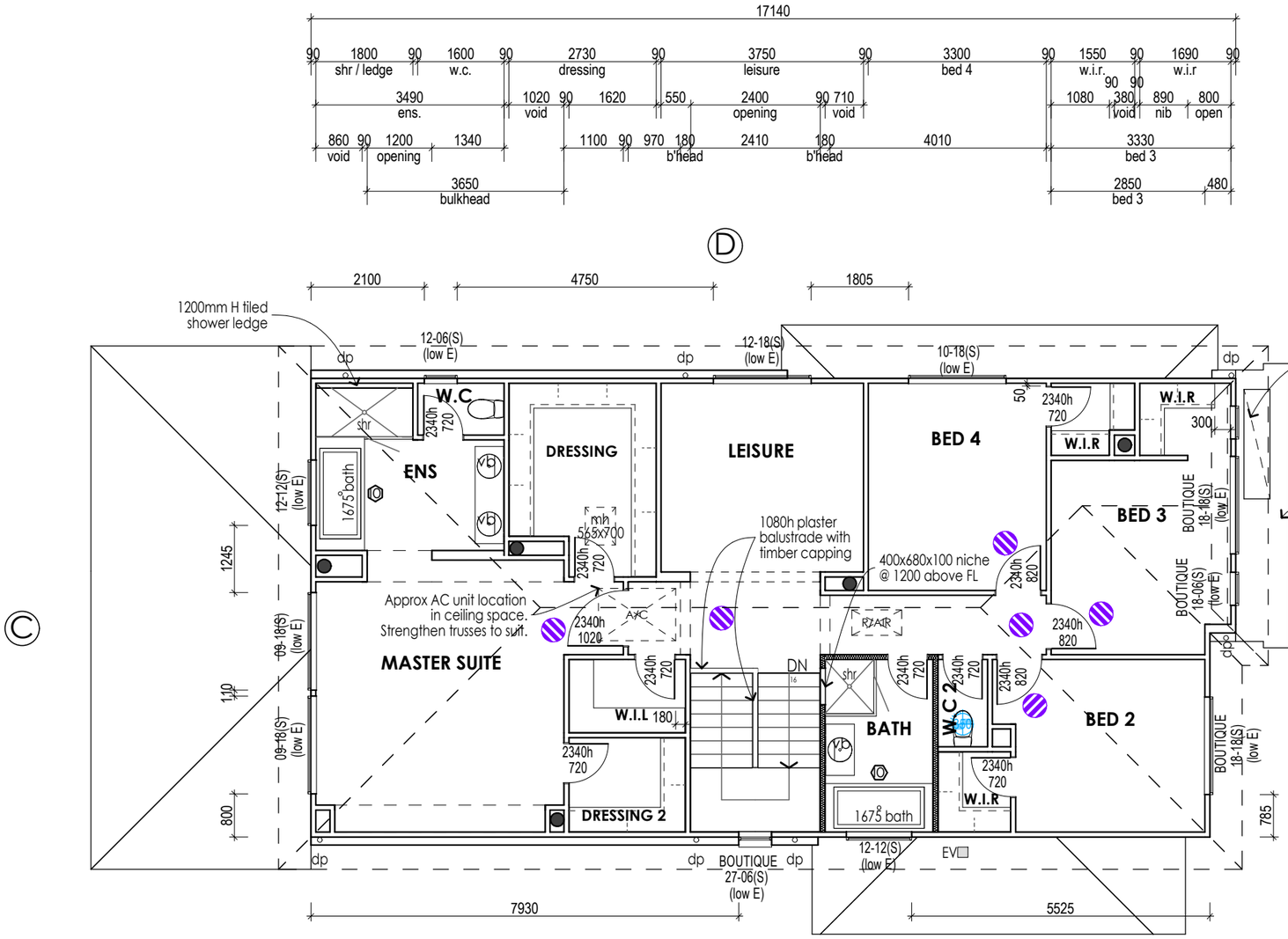

ENERGY EFFICIENCY TO COMPLY WITH THE BUILDING CODE OF AUSTRALIA.
WALL SISALATION (VAPAWRAP) TO EXTERNAL TIMBER FRAMED WALLS (NOT BETWEEN HOUSE & GARAGE).
PROVIDE R2.5 WALL INSULATION BATTS TO EXTERNAL WALLS.
(INCLUDES HOUSE/GARAGE COMMON WALL BUT EXCLUDES GARAGE EXTERNAL WALL).
PROVIDE R6.0 CEILING INSULATION BATTS TO HOUSE.
PROVIDE R2.5 CEILING INSULATION BATTS TO ALFRESCO CEILING.
ROOF SARKING TO ALL ROOFED AREAS INCLUDING GARAGE AND GROUND FLOOR.
PROVIDE R2.5 INSULATION TO CEILING EXTERNAL PERIMETER.
ASSUMES MEDIUM COLOURS & DRAPES BY OWNER AFTER HANDOVER.

A HANDRAIL MUST BE LOCATED ALONG AT LEAST ONE SIDE OF THE STAIR FLIGHT AND BE NO LESS THAN 865mm VERTICALLY ABOVE THE NOSING OF THE STAIR TREADS. HANDRAIL MUST BE CONTINUOUS AND HAVE NO OBSTRUCTIONS ON OR ABOVE THEM THAT WILL TEND TO BREAK A HANDHOLD, EXCEPT FOR NEWEL POSTS, BALL TYPE STANCHIONS OR THE LIKE; IN ACCORDANCE WITH THE NCC.

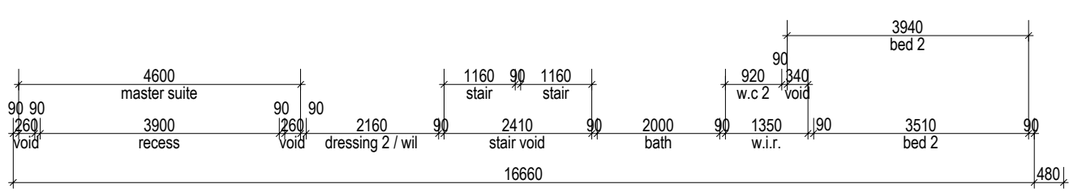

LEGEND

- DIRECT WIRED SMOKE ALARM
- EXHAUST FAN PROVIDING MIN. 40 LT/SEC CLEAN AIR CONNECTED TO LIGHT SWITCH
- OPENING IN WALL FOR PLUMBING RISER STACK INSPECTION OPENING
- OPENING IN FLOOR FOR PLUMBING INSPECTION OPENING
- tap GARDEN TAP
- SV SNAP VENT
- EV EAVE VENT / FV FASCIA VENT
- FRIDGE POINT (REFER TO FRIDGE SPACE DETAIL)
- CAPPED COLD WATER POINT (REFER TO FRIDGE SPACE DETAIL)
- CAPPED HOT WATER POINT
- CAPPED WASTE POINT
- CAPPED GAS POINT
- FLOOR WASTE (ROUND)
- WASTE OVERFLOW/OUTLET (ROUND)
- FLOOR WASTE (SQUARE)
- WASTE OVERFLOW/OUTLET (SQUARE)
- FLOOR WASTE (BERMUDA)
- MH MANHOLE 700X500
- METER BOX
- GAS METER
- INVERTER PV CELL
- METER BOX
- A/C DUCTWORK
- ROOF VENT
- GB GAS BOTTLES

BY: TQC | ISSUED: 03/11/2024 | REV: 10

© HENLEY ARCH P/L
ALL RIGHTS RESERVED. THIS SET OF DRAWINGS IS COPYRIGHT. APART FROM ANY FAIR DEALING AS PERMITTED UNDER THE COPYRIGHT ACT NO PART MAY BE USED, REPRODUCED OR COPIED BY ANY MEANS OR IN ANY FORM WITHOUT PRIOR PERMISSION OF HENLEY ARCH P/L.
THERE IS NO COPYRIGHT LICENCE, EXPRESS OR IMPLIED, GRANTED WITH RESPECT TO THESE DRAWINGS. ONLY HENLEY ARCH P/L OR ITS SUBSIDIARIES MAY BUILD A HOUSE WHICH REPRODUCES THESE DRAWINGS.
THE SIGNED FINAL DRAWINGS WILL TAKE PRECEDENCE AND WILL DIFFER FROM THE DISPLAY HOME DRAWINGS AND THE SIGNED CONTRACT DRAWINGS GIVEN ON GOING PRODUCTION CHANGES.

FIRST FLOOR PLAN | 2B | LH | **Abington 345-D37** | **Watego**

AREAS

GROUND FLR	144.5	SQM	GARAGE	37.6	SQM
FIRST FLR	143.9	SQM			
SUB TOTAL	**288.4**	**SQM**			
ALFRESCO	12.9	SQM			
PORCH	6.0	SQM	**TOTAL**	**344.9**	**SQM**

SCALE	1:100, 1:1
DATE DRN	21/08/2024
DRAWN BY	PV
JOB NUMBER	704031
HSE/FCD NO	9716-WGO
DATE PRINTED	04/11/2024

CLIENT
QLD READYBUILT
LOT 142, CALLI AVENUE
UPPER COOMERA

* NO STUD ZONE BEHIND VANITIES TO SUIT PLUMBING.
* WRITTEN DIMENSIONS TAKE PRECEDENCE OVER SCALE.
* ALL BRICK DIMENSIONS ARE NOMINAL.
* ALL DOOR LEAFS TO BE 2040 MM HIGH, UNLESS NOMINATED OTHERWISE.
* PROVIDE TERMIMESH PROTECTION.
* PROVIDE 1:80 FALL TO BALCONY (MIN 1:100).
* PROVIDE MECHANICAL RESTRICTION TO UPPER FLOOR WINDOWS AS PER THE NCC.
* GAS BOTTLES BY OWNER, 1M MIN. FROM OPENINGS & DRAINS, 3.5M MIN FROM SOURCES OF IGNITION (INSTITU CYLINDERS ONLY), 1.5M FROM SOURCE OF IGNITION (EXCHANGE CYLINDERS ONLY)
* WATERPROOFING TO BE IN ACCORDANCE WITH NCC HOUSING PROVISIONS PART 10.2

READY BUILT by Plantation Homes
A DIVISION OF HENLEY PROPERTIES (QLD) PTY LTD
3354 PACIFIC HIGHWAY, SPRINGWOOD
Ph: (07) 3290 8888 Fax: (07) 3290 8899

PMT

FINAL DRAWINGS	
CHECKED BY: JL	EXT No.
CHECKED TO:	
DATE: 24/10/24	

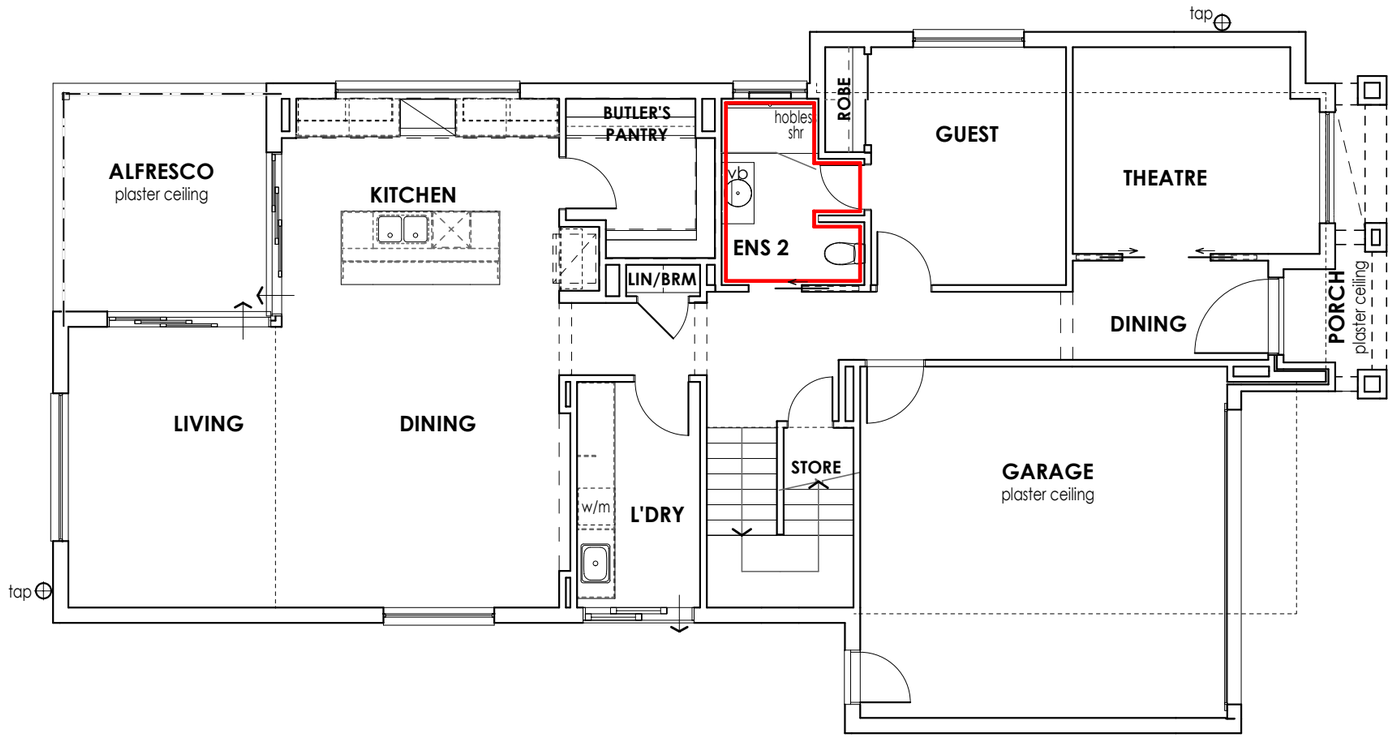

DENOTES EXTENT OF SQUARE SET PLASTER

BY: TQC | ISSUED: 03/11/2024 | REV: 10

© HENLEY ARCH P/L
ALL RIGHTS RESERVED. THIS SET OF DRAWINGS IS COPYRIGHT. APART FROM ANY FAIR DEALING AS PERMITTED UNDER THE COPYRIGHT ACT NO PART MAY BE USED, REPRODUCED OR COPIED BY ANY MEANS OR IN ANY FORM WITHOUT PRIOR PERMISSION OF HENLEY ARCH P/L.
THERE IS NO COPYRIGHT LICENCE, EXPRESS OR IMPLIED, GRANTED WITH RESPECT TO THESE DRAWINGS. ONLY HENLEY ARCH P/L OR ITS SUBSIDIARIES MAY BUILD A HOUSE WHICH REPRODUCES THESE DRAWINGS.

THE SIGNED FINAL DRAWINGS WILL TAKE PRECEDENCE AND WILL DIFFER FROM THE DISPLAY HOME DRAWINGS AND THE SIGNED CONTRACT DRAWINGS GIVEN ON GOING PRODUCTION CHANGES.

PLASTER PLAN G.F | **2C** | **LH**

SCALE	1:100, 1:1
DATE DRN	21/08/2024
DRAWN BY	PV
JOB NUMBER	704031
HSE/FCD NO	9716-WGO

Abington 345-D37 **Watego**

CLIENT
QLD READYBUILT
LOT 142, CALLI AVENUE
UPPER COOMERA

* WRITTEN DIMENSIONS TAKE PRECEDENCE OVER SCALE.
* ALL BULKHEADS & OPENING DIMENSIONS ARE FRAME SIZE.
* ALL BRICK DIMENSIONS ARE NOMINAL.
* TILE EXPANSION JOINTS ARE TO BE PROVIDED AT 6000MM NOMINAL INTERVALS.

READY BUILT by Plantation Homes

A DIVISION OF HENLEY PROPERTIES (QLD) PTY LTD
3354 PACIFIC HIGHWAY, SPRINGWOOD
Ph: (07) 3290 8888 Fax: (07) 3290 8899

PMT

FINAL DRAWINGS	
CHECKED BY: JL	EXT No.
CHECKED TO:	
DATE: 24/10/24	

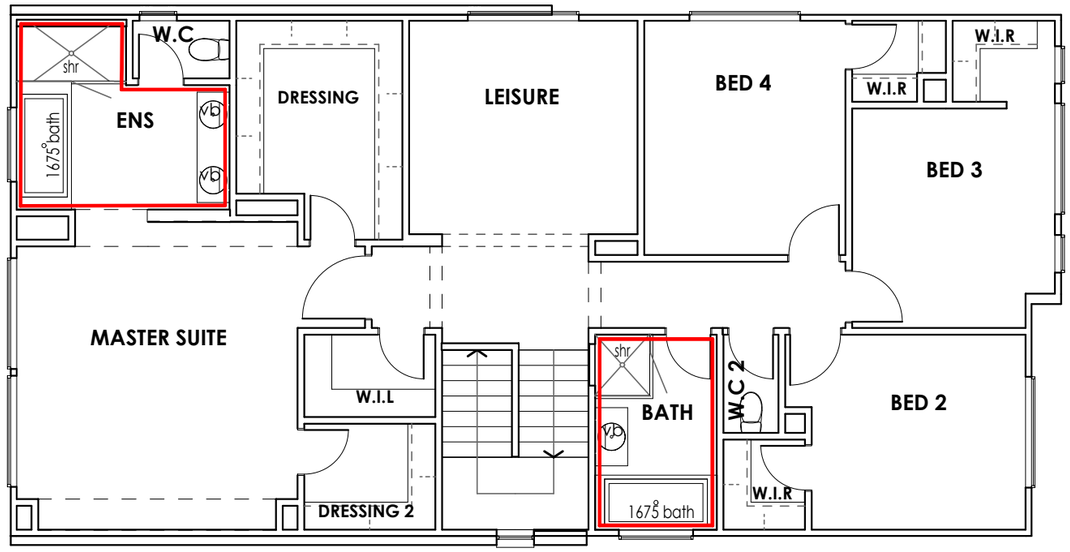

DENOTES EXTENT OF SQUARE SET PLASTER

BY: TQC | ISSUED: 03/11/2024 | REV: 10

© HENLEY ARCH P/L

ALL RIGHTS RESERVED. THIS SET OF DRAWINGS IS COPYRIGHT. APART FROM ANY FAIR DEALING AS PERMITTED UNDER THE COPYRIGHT ACT NO PART MAY BE USED, REPRODUCED OR COPIED BY ANY MEANS OR IN ANY FORM WITHOUT PRIOR PERMISSION OF HENLEY ARCH P/L.
THERE IS NO COPYRIGHT LICENCE, EXPRESS OR IMPLIED, GRANTED WITH RESPECT TO THESE DRAWINGS. ONLY HENLEY ARCH P/L OR ITS SUBSIDIARIES MAY BUILD A HOUSE WHICH REPRODUCES THESE DRAWINGS.

THE SIGNED FINAL DRAWINGS WILL TAKE PRECEDENCE AND WILL DIFFER FROM THE DISPLAY HOME DRAWINGS AND THE SIGNED CONTRACT DRAWINGS GIVEN ON GOING PRODUCTION CHANGES.

PLASTER PLAN F.F.

2D	LH
SCALE	1:100, 1:1
DATE DRN	21/08/2024
DRAWN BY	PV
JOB NUMBER	704031
HSE/FCD NO	9716-WGO

Abington 345-D37 **Watego**

CLIENT

QLD READYBUILT
LOT 142, CALLI AVENUE
UPPER COOMERA

* WRITTEN DIMENSIONS TAKE PRECEDENCE OVER SCALE.
* ALL BULKHEADS & OPENING DIMENSIONS ARE FRAME SIZE.
* ALL BRICK DIMENSIONS ARE NOMINAL.
* TILE EXPANSION JOINTS ARE TO BE PROVIDED AT 6000MM NOMINAL INTERVALS.

READY BUILT by Plantation Homes
A DIVISION OF HENLEY PROPERTIES (QLD) PTY LTD
3354 PACIFIC HIGHWAY, SPRINGWOOD
Ph: (07) 3290 8888 Fax: (07) 3290 8899

MATERIALS ANALYSIS	SQM	%
Cladding	12.0	46.0
Rendered	14.0	54.0
Total	26.0	100.0

PMT

FINAL DRAWINGS

CHECKED BY: JL EXT No.
CHECKED TO:
DATE: 24/10/24

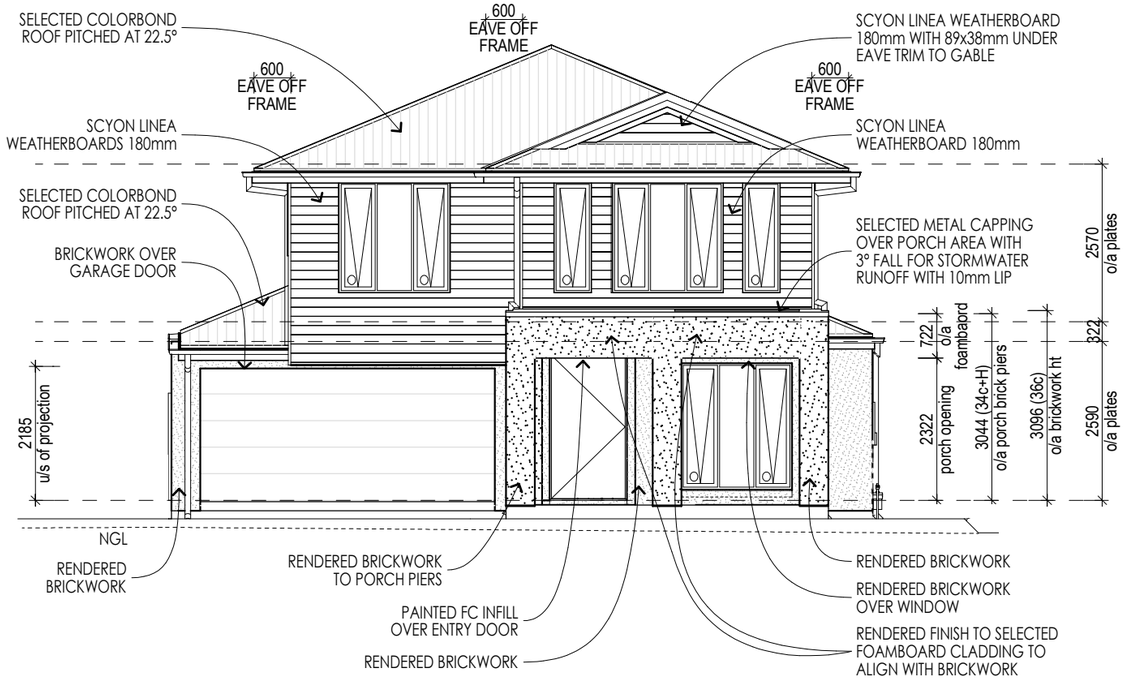

ELEVATION (A)

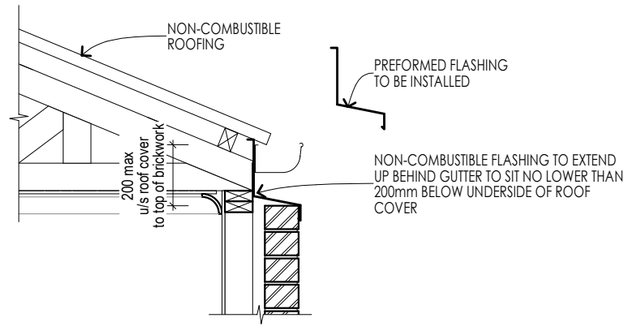

GAR_SBW004 | BV ZERO LOT WALL | GUTTER OVER BRICKWORK | PITCHED ROOF | QLD

ELEVATION (B)

BY: TQC | ISSUED: 03/11/2024 | REV: 10

© HENLEY ARCH P/L
ALL RIGHTS RESERVED. THIS SET OF DRAWINGS IS COPYRIGHT, APART FROM ANY FAIR DEALING AS PERMITTED UNDER THE COPYRIGHT ACT NO PART MAY BE USED, REPRODUCED OR COPIED BY ANY MEANS OR IN ANY FORM WITHOUT PRIOR PERMISSION OF HENLEY ARCH P/L.
THERE IS NO COPYRIGHT LICENCE, EXPRESS OR IMPLIED, GRANTED WITH RESPECT TO THESE DRAWINGS. ONLY HENLEY ARCH P/L OR ITS SUBSIDIARIES MAY BUILD A HOUSE WHICH REPRODUCES THESE DRAWINGS.

THE SIGNED FINAL DRAWINGS WILL TAKE PRECEDENCE AND WILL DIFFER FROM THE DISPLAY HOME DRAWINGS AND THE SIGNED CONTRACT DRAWINGS GIVEN ON GOING PRODUCTION CHANGES.

ELEVATIONS | **3A** | **LH** | **Abington 345-D37** | **Watego**

SCALE	1:100, 1:50, 1:1, 1:20
DATE DRN	21/08/2024
DRAWN BY	PV
JOB NUMBER	704031

CLIENT
QLD READYBUILT
LOT 142, CALLI AVENUE
UPPER COOMERA

* FC SHEET INFILLS OVER ALL DOOR / WINDOW OPENINGS UNLESS INDICATED OTHERWISE.
* 150mm SLOTTED QUAD GUTTER WITH APPROVED OVERFLOW SPACER.
* ALL FIRST FLOOR WINDOWS TO HAVE OPENING RESTRICTORS WITH A MAX. 125MM OPENING.
* TEMPORARY DOWNPIPES ARE TO BE USED UNTIL DOWNPIPES ARE CONNECTED.
* CEILING HEIGHT DIMENSIONS NOMINATED ON ELEVATIONS ARE OVERALL, CEILING HEIGHTS MAYBE LOWER IN LIVING AREAS IF BATTENS TO CEILING ARE REQUIRED AS PER THE PLASTER MANUFACTURERS INSTALLATION.
* EXHAUST FANS TO BE DUCTED TO THE EXTERNAL WALL OR THROUGH THE ROOF SPACE TO OUTSIDE AIR. NO FANS TO DISCHARGE DIRECTLY INTO ROOF SPACE.

READY BUILT by Plantation Homes
A DIVISION OF HENLEY PROPERTIES (QLD) PTY LTD
3354 PACIFIC HIGHWAY, SPRINGWOOD
Ph: (07) 3290 8888 Fax: (07) 3290 8899

PMT

FINAL DRAWINGS	
CHECKED BY: JL	EXT No.
CHECKED TO:	
DATE: 24/10/24	

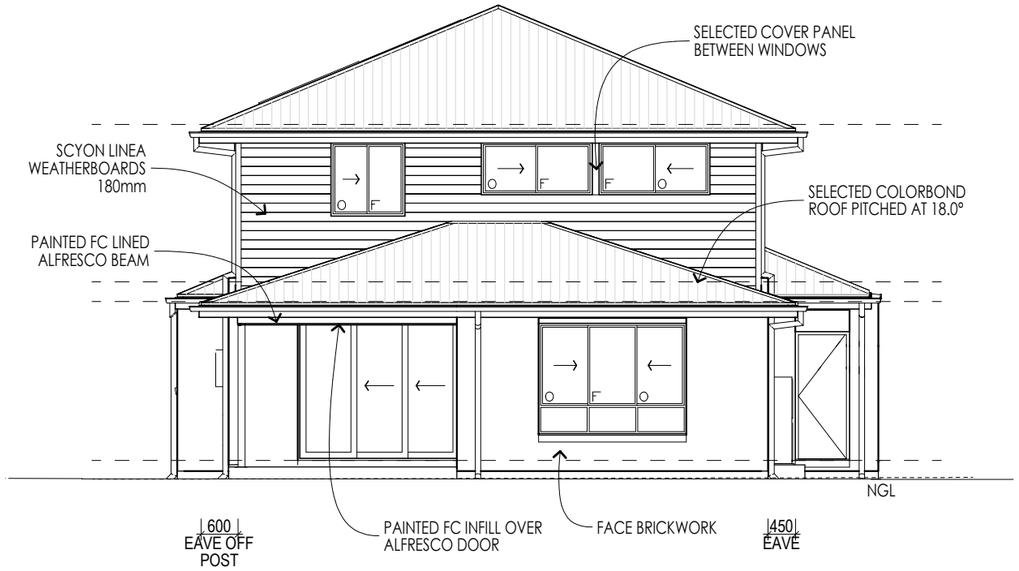

ELEVATION C

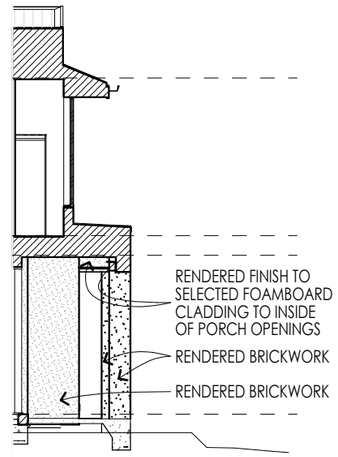

ELEVATION E

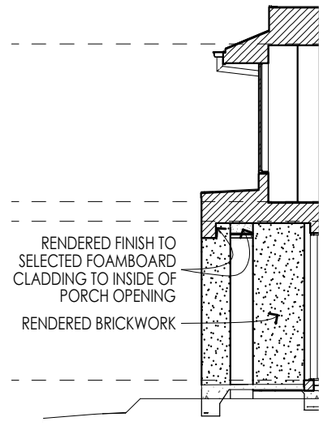

ELEVATION F

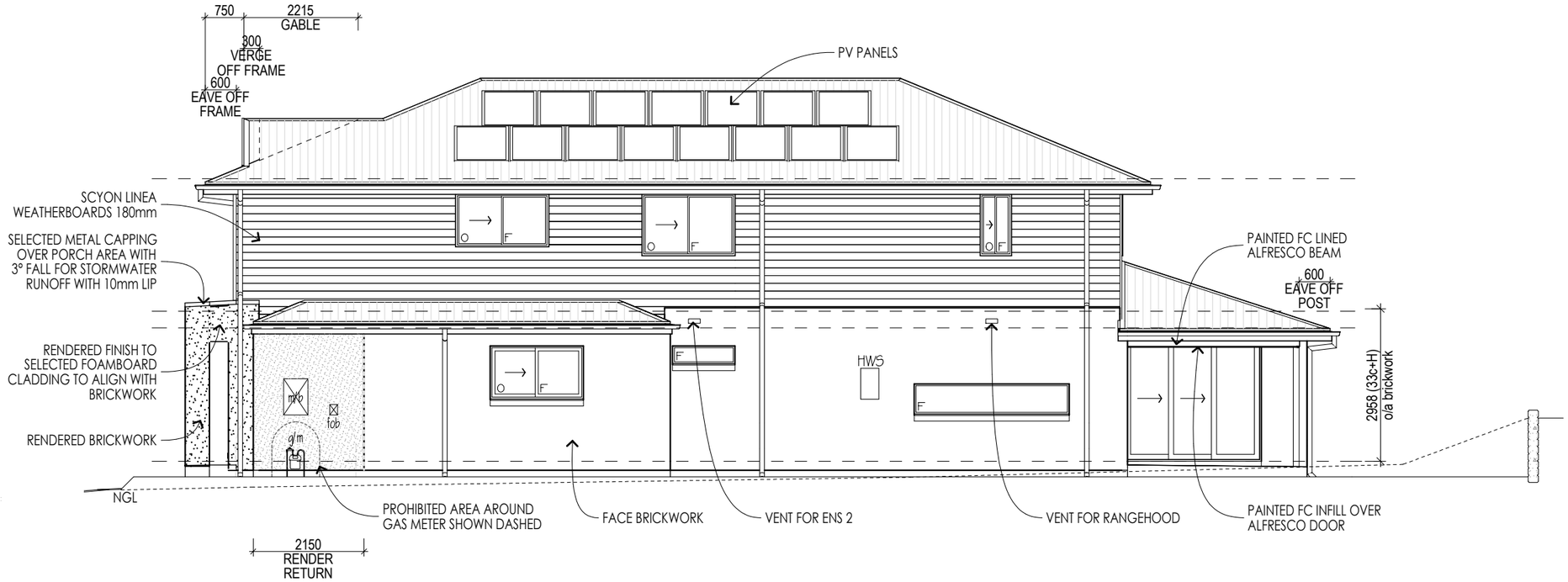

ELEVATION D

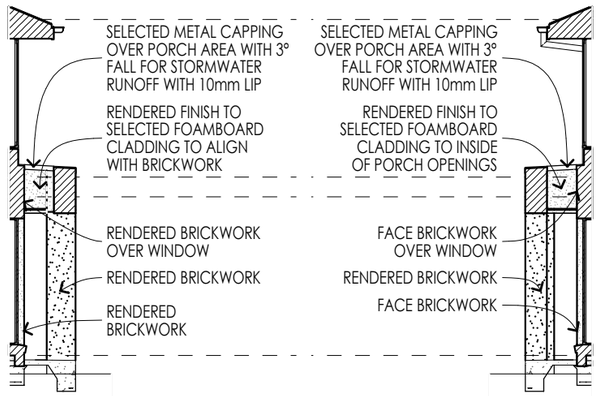

ELEVATION G ELEVATION H

BY: TQC | ISSUED: 03/11/2024 | REV: 10

© HENLEY ARCH P/L
ALL RIGHTS RESERVED. THIS SET OF DRAWINGS IS COPYRIGHT, APART FROM ANY FAIR DEALING AS PERMITTED UNDER THE COPYRIGHT ACT NO PART MAY BE USED, REPRODUCED OR COPIED BY ANY MEANS OR IN ANY FORM WITHOUT PRIOR PERMISSION OF HENLEY ARCH P/L.
THERE IS NO COPYRIGHT LICENCE, EXPRESS OR IMPLIED, GRANTED WITH RESPECT TO THESE DRAWINGS, ONLY HENLEY ARCH P/L OR ITS SUBSIDIARIES MAY BUILD A HOUSE WHICH REPRODUCES THESE DRAWINGS.

THE SIGNED FINAL DRAWINGS WILL TAKE PRECEDENCE AND WILL DIFFER FROM THE DISPLAY HOME DRAWINGS AND THE SIGNED CONTRACT DRAWINGS GIVEN ON GOING PRODUCTION CHANGES.

SECTIONS / ELEVATIONS | **3B** | **LH**

SCALE	1:100, 1:50, 1:1
DATE DRN	21/08/2024
DRAWN BY	PV
JOB NUMBER	704031

Abington 345-D37 **Watego**

CLIENT
QLD READYBUILT
LOT 142, CALLI AVENUE
UPPER COOMERA

* FC SHEET INFILLS OVER ALL DOOR / WINDOW OPENINGS UNLESS INDICATED OTHERWISE.
* 150mm SLOTTED QUAD GUTTER WITH APPROVED OVERFLOW SPACER.
* ALL FIRST FLOOR WINDOWS TO HAVE OPENING RESTRICTORS WITH A MAX. 125MM OPENING.
* TEMPORARY DOWNPIPES ARE TO BE USED UNTIL DOWNPIPES ARE CONNECTED.
* CEILING HEIGHT DIMENSIONS NOMINATED ON ELEVATIONS ARE OVERALL, CEILING HEIGHTS MAYBE LOWER IN LIVING AREAS IF BATTENS TO CEILING ARE REQUIRED AS PER THE PLASTER MANUFACTURERS INSTALLATION.
* EXHAUST FANS TO BE DUCTED TO THE EXTERNAL WALL OR THROUGH THE ROOF SPACE TO OUTSIDE AIR. NO FANS TO DISCHARGE DIRECTLY INTO ROOF SPACE.

READY BUILT by Plantation Homes
A DIVISION OF HENLEY PROPERTIES (QLD) PTY LTD
3354 PACIFIC HIGHWAY, SPRINGWOOD
Ph: (07) 3290 8888 Fax: (07) 3290 8899

FIBRE OPTIC ESTATE
1 X UNDERGROUND P25MM LEAD-IN CONDUIT & DRAW WIRE. CONDUIT FROM OUTSIDE TO INTERNAL ONT
1 X CAT 6 DATA INTERNAL CABLING TO 1ST POINT
1 X DPP IN GARAGE

PMT

FINAL DRAWINGS	
CHECKED BY: JL	EXT No.
CHECKED TO:	
DATE: 24/10/24	

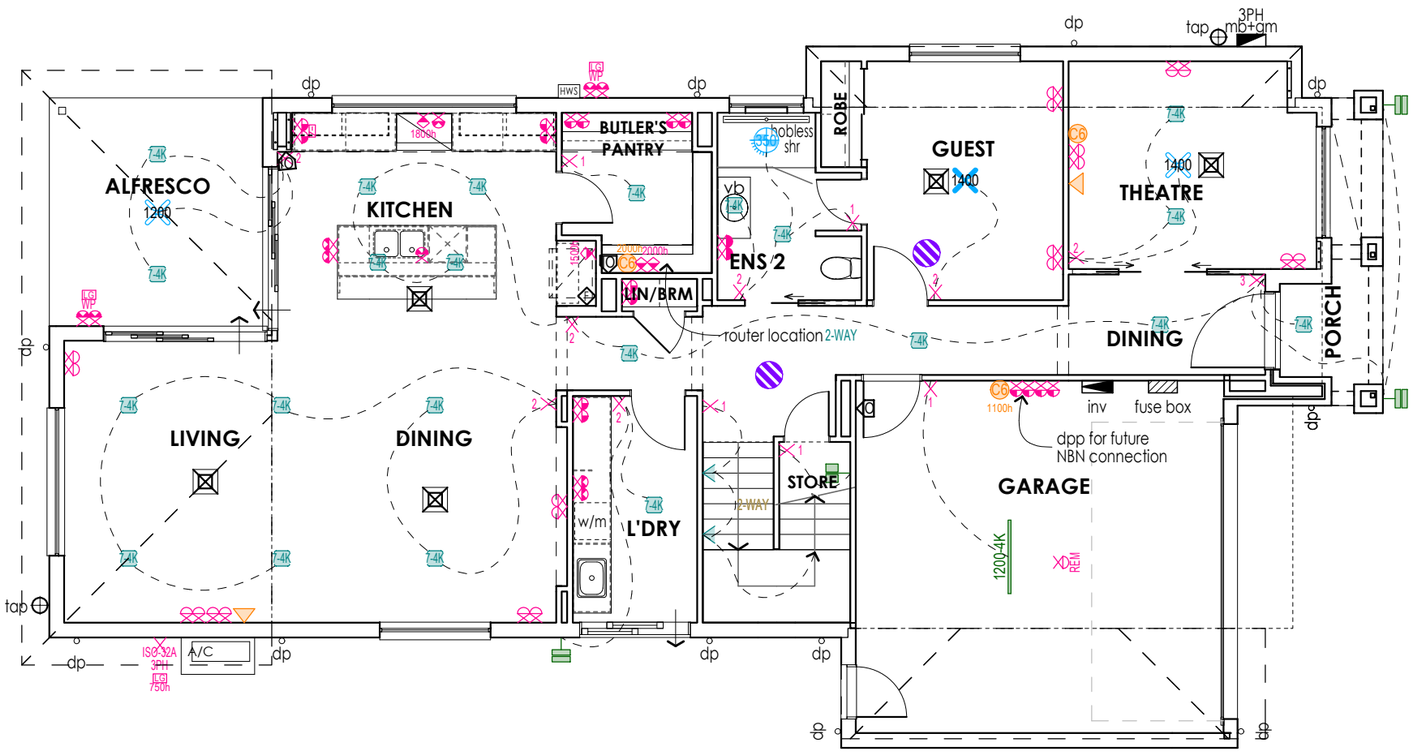

ELECTRICAL LEGEND

- 10A DOUBLE POWER POINT @1100mm
- 10A DOUBLE POWER POINT @1350mm
- 10A DOUBLE POWER POINT @300mm
- 10A DOUBLE POWER POINT @750mm
- 10A DOUBLE POWER POINT AS NOTED
- 10A DOUBLE POWER POINT WITH USB A+C POINT @1100mm
- 10A DOUBLE POWER POINT WITH USB A+C POINT @300mm
- 10A DOUBLE VERTICAL POWER POINT @1350mm
- WP 10A DOUBLE WEATHERPROOF POWER POINT @750mm
- REM 10A POWER POINT IN CEILING @2590mm
- 10A SINGLE POWER POINT @750mm
- 10A SINGLE POWER POINT AS NOTED
- 10A SWITCH
- 350 CEILING EXHAUST FAN 350 w/ TIMER SWITCHED WITH LIGHT
- 1400 CEILING FAN (4 BLADE)
- 1400 CEILING FAN (4 BLADE) WITH LIGHT
- DIRECT WIRED SMOKE ALARM
- FUSE BOX
- ISO 3PH ISOLATOR SWITCH (3 PHASE)
- METER BOX @1900 TO TOP (3 PHASE), (GAS METER BELOW)
- PD PUSH BUTTON DIMMER SWITCH
- SOLAR COLLECTOR INVERTER
- C6 TELEPHONE / DATA FIBRE OPTIC POINT @300mm. (UNLESS NOTED OTHERWISE)
- TELEVISION ANTENNA POINT @300mm. (UNLESS NOTED OTHERWISE)

LIGHTING LEGEND

- EXT. WALL MOUNTED LIGHT FITTING @1800mm (UNLESS NOTED OTHERWISE) (10w)
- INT. LED WALL LIGHT FITTING @1800mm (UNLESS NOTED OTHERWISE) (9w)
- 4K LED DOWNLIGHT (COOL 4000K) (7w)
- 1200-4K SINGLE TUBED LED LIGHT (1200) (NATURAL 4000K) (40w)
- STEP LIGHTING (COOL 6500K) @300MM ABOVE TREAD (4.5w)

HVAC LEGEND

- A/C A/C CONDENSOR
- A/C DUCT
- CEILING REFRIDGERATIVE/COOLING OUTLET
- A/C REFRIDGERATIVE UNIT (LOCATED IN CEILING)
- R/AIR RETURN AIR (CEILING)

Lighting Calculator

Internal House Area (NOT inc garage, alfresco etc)	288.4m²		
Maximum Wattage Permitted. (MAX 5w p/m²)	1442w	Watts	
Number of LED Batten Bulb	4	60	
Number of LED Downlight	38	266	
Number of LED Other	5	27	
	Total Watts	**353**	**1.22 p/m²**
Outdoor Area (Alfresco, Balcony, Porch, Verandah)	18.9m²		
Maximum Wattage Permitted. (MAX 4w p/m²)	76w	Watts	
Number of LED Downlight	3	21	
	Total Watts	**21**	**1.11 p/m²**
Garage Area	37.6m²		
Maximum Wattage Permitted. (MAX 3w p/m²)	113w	Watts	
Number of LED Tube / Oyster	1	40	
	Total Watts	**40**	**1.06 p/m²**

* Where external lights are provided, all external lights are to have a daylight sensor or have an average light source efficacy of not less than 40 Lumens/W.
* LED downlight manufacturer codes: DN029BLED8CCT90, DN029BL10CCT120, DN029BL12CCT150, DN029BL20CCT200.
* All LED downlights IC-4 compliant and IP54 rated.

BY: TQC | ISSUED: 03/11/2024 | REV: 10

© HENLEY ARCH P/L
ALL RIGHTS RESERVED. THIS SET OF DRAWINGS IS COPYRIGHT. APART FROM ANY FAIR DEALING AS PERMITTED UNDER THE COPYRIGHT ACT NO PART MAY BE USED, REPRODUCED OR COPIED BY ANY MEANS OR IN ANY FORM WITHOUT PRIOR PERMISSION OF HENLEY ARCH P/L.
THERE IS NO COPYRIGHT LICENCE, EXPRESS OR IMPLIED, GRANTED WITH RESPECT TO THESE DRAWINGS. ONLY HENLEY ARCH P/L OR ITS SUBSIDIARIES MAY BUILD A HOUSE WHICH REPRODUCES THESE DRAWINGS.

THE SIGNED FINAL DRAWINGS WILL TAKE PRECEDENCE AND WILL DIFFER FROM THE DISPLAY HOME DRAWINGS AND THE SIGNED CONTRACT DRAWINGS GIVEN ON GOING PRODUCTION CHANGES.

ELECTRICAL PLAN G.F.

4A	LH	Abington 345-D37	Watego

COLOUR

MW	MATT WHITE
WW	WHITE WITH WHITE
BB	BLACK WITH BLACK
MB	MATT BLACK
WOK	WHITE ON OAK
WSK	WHITE WITH SKY
WM	WHITE WITH MOON
BWN	BLACK WITH WALNUT
CG	CEMENT GREY
LG	LIMESTONE GREY

SCALE	1:100, 1:1
DATE DRN	21/08/2024
DRAWN BY	PV
JOB NUMBER	704031

CLIENT

QLD READYBUILT
LOT 142, CALLI AVENUE
UPPER COOMERA

* ALL LIGHT SWITCHES TO BE AT 1350MM (WALL PLATES).
* BUILDER SUPPLIED R'HOODS/ EXHAUST FANS TO HAVE A MIN. FLOW RATE OF 40 LTR/ SEC.
* DIRECT WIRING TO ELECTRICAL WALL OVEN, UPRIGHT COOKERS.
* PROVIDE POWER POINT & LIGHT IN CEILING SPACE FOR HEATING/AIRCONDITIONING. (WHERE APPLICABLE).
* WHERE APPLICABLE, WIRING TO BE PROVIDED IN SLAB TO KITCHEN ISLAND BENCHES.
* PROVIDE TELEVISION POINTS AS SHOWN INCLUDING 7M OF CABLE IN ROOF SPACE FOR EACH POINT FOR FUTURE CONNECTION OF ANTENNA BY OTHERS.
* ALL DUCT LOCATIONS ARE INDICATIVE ONLY. POSITIONS MAY VARY TO ENSURE OPTIMUM PERFORMANCE OF THE UNIT AS PER MANUFACTURERS RECOMMENDATIONS & OR STRUCTURAL REQUIREMENTS.
* ALL SMOKE ALARMS ARE TO BE INTERCONNECTED.
* ALL ELECTRICAL FITITNGS TO BE INSTALLED TO ACHIEVE COMPLICANCE WITH AS3000.

READY BUILT by Plantation Homes
A DIVISION OF HENLEY PROPERTIES (QLD) PTY LTD
3354 PACIFIC HIGHWAY, SPRINGWOOD
Ph: (07) 3290 8888 Fax: (07) 3290 8899

FIBRE OPTIC ESTATE
1 X UNDERGROUND P25MM LEAD-IN CONDUIT & DRAW WIRE. CONDUIT FROM OUTSIDE TO INTERNAL ONT
1 X CAT 6 DATA INTERNAL CABLING TO 1ST POINT
1 X DPP IN GARAGE

PMT

FINAL DRAWINGS	
CHECKED BY: JL	EXT No.
CHECKED TO:	
DATE: 24/10/24	

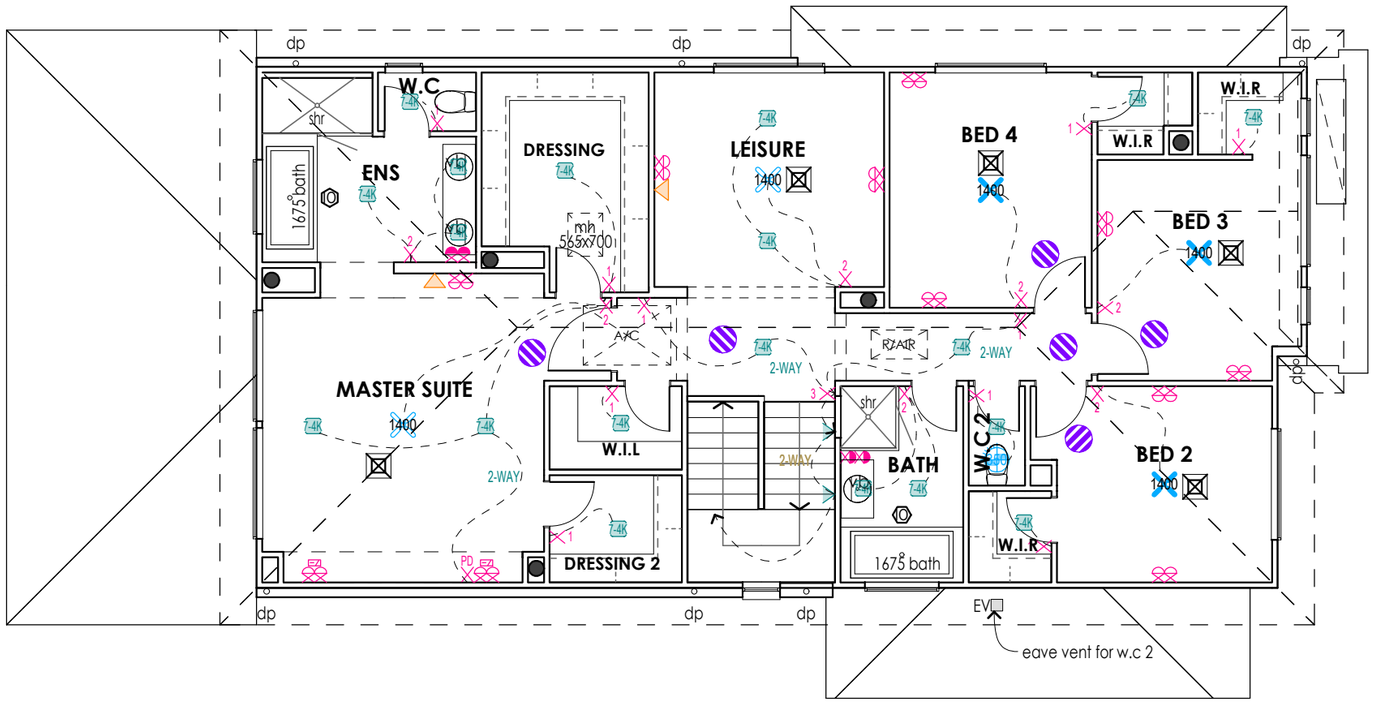

ELECTRICAL LEGEND

- 10A DOUBLE POWER POINT @1100mm
- 10A DOUBLE POWER POINT @1350mm
- 10A DOUBLE POWER POINT @300mm
- 10A DOUBLE POWER POINT @750mm
- 10A DOUBLE POWER POINT AS NOTED
- 10A DOUBLE POWER POINT WITH USB A+C POINT @1100mm
- 10A DOUBLE POWER POINT WITH USB A+C POINT @300mm
- 10A DOUBLE VERTICAL POWER POINT @1350mm
- WP 10A DOUBLE WEATHERPROOF POWER POINT @750mm
- REM 10A POWER POINT IN CEILING @2590mm
- 10A SINGLE POWER POINT @750mm
- 10A SINGLE POWER POINT AS NOTED
- 10A SWITCH
- 350 CEILING EXHAUST FAN 350 w/ TIMER SWITCHED WITH LIGHT
- 1400 CEILING FAN (4 BLADE)
- 1400 CEILING FAN (4 BLADE) WITH LIGHT
- DIRECT WIRED SMOKE ALARM
- FUSE BOX
- ISO 35A ISOLATOR SWITCH (3 PHASE)
- METER BOX @1900 TO TOP (3 PHASE), (GAS METER BELOW)
- PD PUSH BUTTON DIMMER SWITCH
- SOLAR COLLECTOR INVERTER
- C6 TELEPHONE / DATA FIBRE OPTIC POINT @300mm. (UNLESS NOTED OTHERWISE)
- TELEVISION ANTENNA POINT @300mm. (UNLESS NOTED OTHERWISE)

LIGHTING LEGEND

- EXT. WALL MOUNTED LIGHT FITTING @1800mm (UNLESS NOTED OTHERWISE) (10w)
- INT. LED WALL LIGHT FITTING @1800mm (UNLESS NOTED OTHERWISE) (9w)
- 7-4K LED DOWNLIGHT (COOL 4000K) (7w)
- 1200-4K SINGLE TUBED LED LIGHT (1200) (NATURAL 4000K) (40w)
- STEP LIGHTING (COOL 6500K) @300MM ABOVE TREAD (4.5w)

HVAC LEGEND

- A/C A/C CONDENSOR
- A/C DUCT
- CEILING REFRIDGERATIVE/COOLING OUTLET
- A/C REFRIDGERATIVE UNIT (LOCATED IN CEILING)
- R/AIR RETURN AIR (CEILING)

Lighting Calculator

Internal House Area (NOT inc garage, alfresco etc)	288.4m²		
Maximum Wattage Permitted. (MAX 5w p/m²)	1442w	Watts	
Number of LED Batten Bulb	4	60	
Number of LED Downlight	38	266	
Number of LED Other	5	27	
	Total Watts	**353**	**1.22 p/m²**
Outdoor Area (Alfresco, Balcony, Porch, Verandah)	18.9m²		
Maximum Wattage Permitted. (MAX 4w p/m²)	76w	Watts	
Number of LED Downlight	3	21	
	Total Watts	**21**	**1.11 p/m²**
Garage Area	37.6m²		
Maximum Wattage Permitted. (MAX 3w p/m²)	113w	Watts	
Number of LED Tube / Oyster	1	40	
	Total Watts	**40**	**1.06 p/m²**

* Where external lights are provided, all external lights are to have a daylight sensor or have an average light source efficacy of not less than 40 Lumens/W.
* LED downlight manufacturer codes: DN029BLED8CCT90, DN029BL10CCT120, DN029BL12CCT150, DN029BL20CCT200.
* All LED downlights IC-4 compliant and IP54 rated.

BY: TQC | ISSUED: 03/11/2024 | REV: 10

© HENLEY ARCH P/L
ALL RIGHTS RESERVED. THIS SET OF DRAWINGS IS COPYRIGHT. APART FROM ANY FAIR DEALING AS PERMITTED UNDER THE COPYRIGHT ACT NO PART MAY BE USED, REPRODUCED OR COPIED BY ANY MEANS OR IN ANY FORM WITHOUT PRIOR PERMISSION OF HENLEY ARCH P/L.
THERE IS NO COPYRIGHT LICENCE, EXPRESS OR IMPLIED, GRANTED WITH RESPECT TO THESE DRAWINGS. ONLY HENLEY ARCH P/L OR ITS SUBSIDIARIES MAY BUILD A HOUSE WHICH REPRODUCES THESE DRAWINGS.

THE SIGNED FINAL DRAWINGS WILL TAKE PRECEDENCE AND WILL DIFFER FROM THE DISPLAY HOME DRAWINGS AND THE SIGNED CONTRACT DRAWINGS GIVEN ON GOING PRODUCTION CHANGES.

ELECTRICAL PLAN F.F.

4B	LH	Abington 345-D37	Watego

COLOUR

MW	MATT WHITE
WW	WHITE WITH WHITE
BB	BLACK WITH BLACK
MB	MATT BLACK
WOK	WHITE ON OAK
WSK	WHITE WITH SKY
WM	WHITE WITH MOON
BWN	BLACK WITH WALNUT
CG	CEMENT GREY
LG	LIMESTONE GREY

SCALE	1:100, 1:1
DATE DRN	21/08/2024
DRAWN BY	PV
JOB NUMBER	704031

CLIENT

QLD READYBUILT
LOT 142, CALLI AVENUE
UPPER COOMERA

* ALL LIGHT SWITCHES TO BE AT 1350MM (WALL PLATES).
* BUILDER SUPPLIED R'HOODS/ EXHAUST FANS TO HAVE A MIN. FLOW RATE OF 40 LTR/ SEC.
* DIRECT WIRING TO ELECTRICAL WALL OVEN, UPRIGHT COOKERS.
* PROVIDE POWER POINT & LIGHT IN CEILING SPACE FOR HEATING/AIRCONDITIONING. (WHERE APPLICABLE).
* WHERE APPLICABLE, WIRING TO BE PROVIDED IN SLAB TO KITCHEN ISLAND BENCHES.
* PROVIDE TELEVISION POINTS AS SHOWN INCLUDING 7M OF CABLE IN ROOF SPACE FOR EACH POINT FOR FUTURE CONNECTION OF ANTENNA BY OTHERS.
* ALL DUCT LOCATIONS ARE INDICATIVE ONLY. POSITIONS MAY VARY TO ENSURE OPTIMUM PERFORMANCE OF THE UNIT AS PER MANUFACTURERS RECOMMENDATIONS & OR STRUCTURAL REQUIREMENTS.
* ALL SMOKE ALARMS ARE TO BE INTERCONNECTED.
* ALL ELECTRICAL FITITNGS TO BE INSTALLED TO ACHIEVE COMPLICANCE WITH AS3000.

READY BUILT by Plantation Homes
A DIVISION OF HENLEY PROPERTIES (QLD) PTY LTD
3354 PACIFIC HIGHWAY, SPRINGWOOD
Ph: (07) 3290 8888 Fax: (07) 3290 8899

CABINETRY SCHEDULE | KITCHEN															
CABINET TYPE	CABINET STYLE	BENCHTOP PROFILE	SHADOW PROFILE	SUBSTRATE INFILL PROFILE	END INFILL PROFILE	TOP INFILL PROFILE	END PANEL PROFILE	DOOR BOTTOM PROFILE	BENCHTOP HEIGHT	CARCASS HEIGHT	KICKER HEIGHT	KICKER O'HANG FRONT	KICKER O'HANG LEFT	KICKER O'HANG RIGHT	O/A SUBSTRATE THICKNESS
2 Drawer Unit	Island	20mm VCS	16mm	-	-	-	Hidden	-	915mm	728mm	142mm	34mm	-	-	25mm
4 Drawer Unit	Island	20mm VCS	16mm	-	-	-	Hidden	-	915mm	728mm	142mm	34mm	-	-	25mm
Cabinet 2 Door	Base	20mm VCS	16mm	-	-	-	Exposed	-	915mm	728mm	142mm	34mm	-	-	25mm
Cabinet 2 Door	Base	20mm VCS	16mm	-	Flush	-	-	-	915mm	728mm	142mm	34mm	-	-	25mm
Cabinet 2 Door	Island	20mm VCS	16mm	-	-	-	Hidden	-	915mm	728mm	142mm	34mm	-	-	25mm
Dishwasher Unit	Island	20mm VCS	16mm	-	-	-	-	-	915mm	-	-	-	-	-	25mm
Overhead 2 Door	Overhead	-	-	-	-	32mm Recessed	Hidden	10mm	-	588mm	-	-	-	-	-
Overhead 2 Door	Overhead	-	-	-	Flush	32mm Recessed	-	10mm	-	588mm	-	-	-	-	-
Overhead Fridge	Overhead	-	-	-	Flush	32mm Recessed	-	10mm	-	400mm	-	-	-	-	-
Upright Oven Unit	Base	20mm VCS	-	-	-	-	-	-	915mm	-	-	-	-	-	25mm

PMT

FINAL DRAWINGS

CHECKED BY: JL EXT No.
CHECKED TO:
DATE: 24/10/24

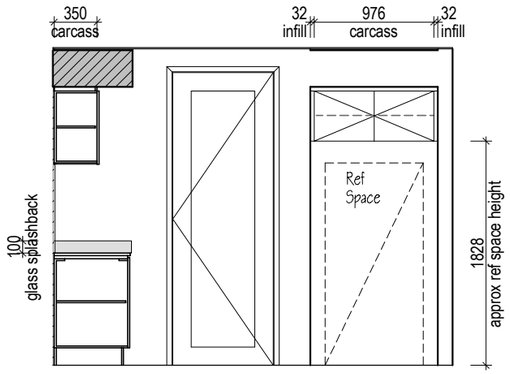

KITCHEN VIEW A

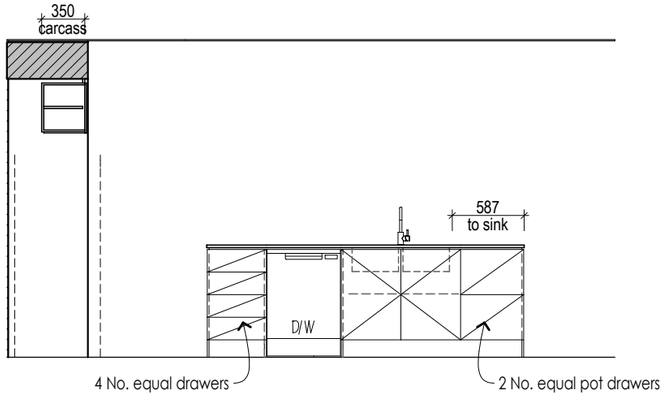

KITCHEN VIEW B

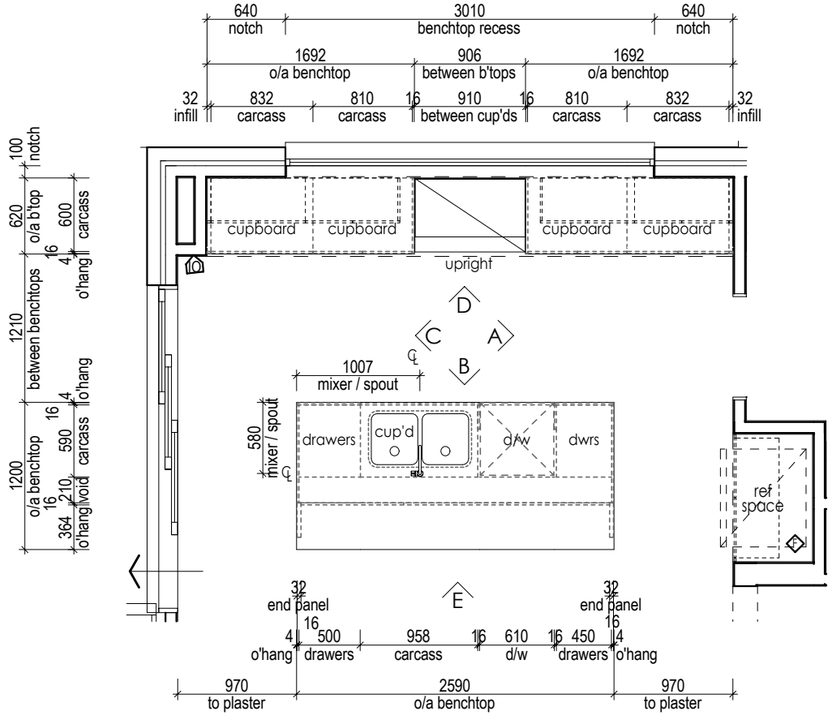

KITCHEN BASE CABINET LAYOUT

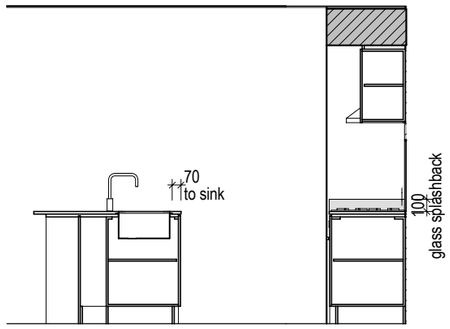

KITCHEN VIEW C

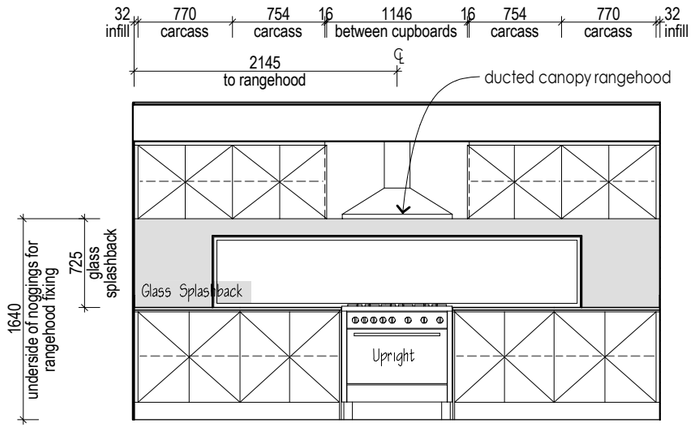

KITCHEN VIEW D

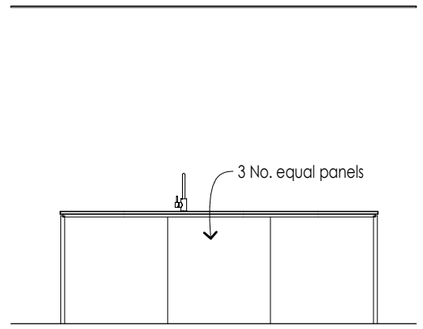

KITCHEN VIEW E

BY: TQC | ISSUED: 03/11/2024 | REV: 10

© HENLEY ARCH P/L
ALL RIGHTS RESERVED. THIS SET OF DRAWINGS IS COPYRIGHT, APART FROM ANY FAIR DEALING AS PERMITTED UNDER THE COPYRIGHT ACT NO PART MAY BE USED, REPRODUCED OR COPIED BY ANY MEANS OR IN ANY FORM WITHOUT PRIOR PERMISSION OF HENLEY ARCH P/L.
THERE IS NO COPYRIGHT LICENCE, EXPRESS OR IMPLIED, GRANTED WITH RESPECT TO THESE DRAWINGS. ONLY HENLEY ARCH P/L OR ITS SUBSIDIARIES MAY BUILD A HOUSE WHICH REPRODUCES THESE DRAWINGS.

THE SIGNED FINAL DRAWINGS WILL TAKE PRECEDENCE AND WILL DIFFER FROM THE DISPLAY HOME DRAWINGS AND THE SIGNED CONTRACT DRAWINGS GIVEN ON GOING PRODUCTION CHANGES.

INTERNALS - KITCHEN | 5A | LH

SCALE	1:50, 1:1
DATE DRN	21/08/2024
DRAWN BY	PV
JOB NUMBER	704031

Abington 345-D37 — Watego

CLIENT
QLD READYBUILT
LOT 142, CALLI AVENUE
UPPER COOMERA

* TILE HEIGHTS ARE NOMINAL ONLY. FINISHED TILE HEIGHTS MAY VARY BASED ON SELECTED TILES.
* ALL APPLIANCE DIMENSIONS AND VENTING TO BE CONFIRMED BY CABINET MAKER FROM THE RELEVANT INSTALLATION/ SPECIFICATION MANUAL.
* HEIGHTS TO REF. SPACE ARE FROM SLAB FLOOR LEVEL & DO NOT ALLOW FOR FLOOR COVERINGS.
* FALLS TO FLOOR WASTES WILL BE MIN. 1:80 & MAX. 1:50 (LOCATIONS ARE NOMINAL).
* ALL CUPBOARD DIMENSIONS TO BE CONFIRMED BY SITE MEASURE.
* DIMENSIONS TO SPOUTS & TAPS/MIXERS ARE NOMINAL ONLY AND MAY VARY SLIGHTLY ON SITE.
* DETAILS ARE TO BE USED AS A GUIDE ONLY. ALL CABINETRY CONSTRUCTION MUST MEET THE REQUIREMENTS OF AS 4386.

DENOTES WALL TILES, UNLESS NOTED OTHERWISE. REFER TO INTERNALS

READY BUILT by Plantation Homes

A DIVISION OF HENLEY PROPERTIES (QLD) PTY LTD
3354 PACIFIC HIGHWAY, SPRINGWOOD
Ph: (07) 3290 8888 Fax: (07) 3290 8899

CABINETRY SCHEDULE | KITCHEN

CABINET TYPE	CABINET STYLE	BENCHTOP PROFILE	SHADOW PROFILE	SUBSTRATE INFILL PROFILE	END INFILL PROFILE	TOP INFILL PROFILE	END PANEL PROFILE	DOOR BOTTOM PROFILE	BENCHTOP HEIGHT	CARCASS HEIGHT	KICKER HEIGHT	KICKER O'HANG FRONT	KICKER O'HANG LEFT	KICKER O'HANG RIGHT	O/A SUBSTRATE THICKNESS
2 Drawer Unit	Island	20mm VCS	16mm	-	-	-	Hidden	-	915mm	728mm	142mm	34mm	-	-	25mm
4 Drawer Unit	Island	20mm VCS	16mm	-	-	-	Hidden	-	915mm	728mm	142mm	34mm	-	-	25mm
Cabinet 2 Door	Base	20mm VCS	16mm	-	-	-	Exposed	-	915mm	728mm	142mm	34mm	-	-	25mm
Cabinet 2 Door	Base	20mm VCS	16mm	-	Flush	-	-	-	915mm	728mm	142mm	34mm	-	-	25mm
Cabinet 2 Door	Island	20mm VCS	16mm	-	-	-	Hidden	-	915mm	728mm	142mm	34mm	-	-	25mm
Dishwasher Unit	Island	20mm VCS	16mm	-	-	-	-	-	915mm	-	-	-	-	-	25mm
Overhead 2 Door	Overhead	-	-	-	-	32mm Recessed	Hidden	10mm	-	588mm	-	-	-	-	-
Overhead 2 Door	Overhead	-	-	-	Flush	32mm Recessed	-	10mm	-	588mm	-	-	-	-	-
Overhead Fridge	Overhead	-	-	-	Flush	32mm Recessed	-	10mm	-	400mm	-	-	-	-	-
Upright Oven Unit	Base	20mm VCS	-	-	-	-	-	-	915mm	-	-	-	-	-	25mm

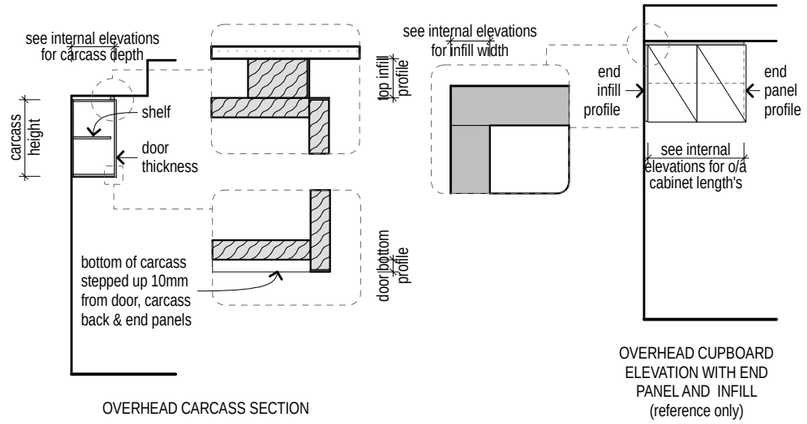

OVERHEAD CARCASS SECTION

OVERHEAD CUPBOARD ELEVATION WITH END PANEL AND INFILL (reference only)

COHD001 | CABINET STYLE | OVERHEAD WITH BULKHEAD ABOVE

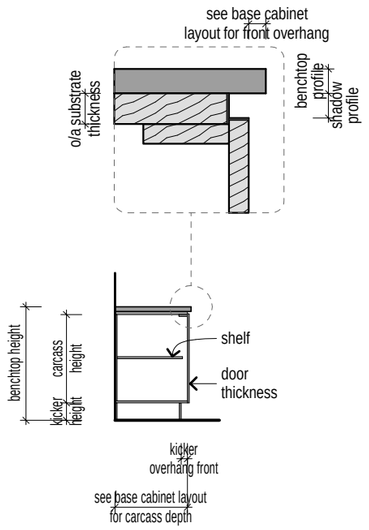

BASE CARCASS SECTION

CBAS001 | CABINET STYLE | BASE

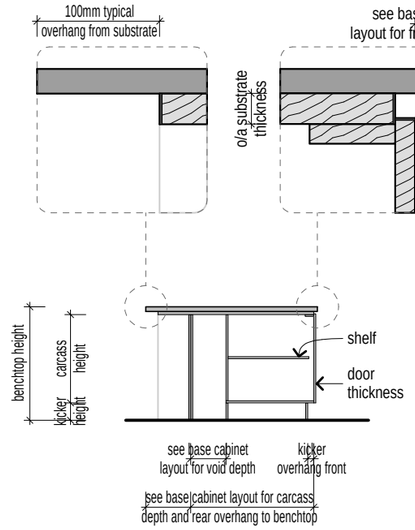

ISLAND CARCASS SECTION

CISL030 | CABINET STYLE | ISLAND WITH VOID & OVERHANG

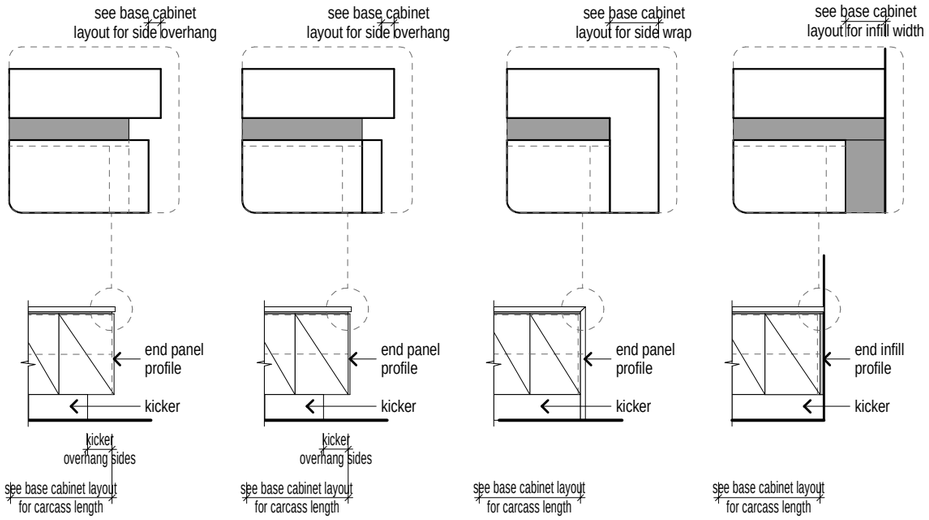

ELEVATION WITH HIDDEN PANEL (reference only)

ELEVATION WITH EXPOSED PANEL (reference only)

ELEVATION WITH END WRAP (reference only)

ELEVATION WITH END INFILL (reference only)

CELP001 | CABINET ELEVATION WITH KICKER

PMT

FINAL DRAWINGS

CHECKED BY: JL EXT No.
CHECKED TO:
DATE: 24/10/24

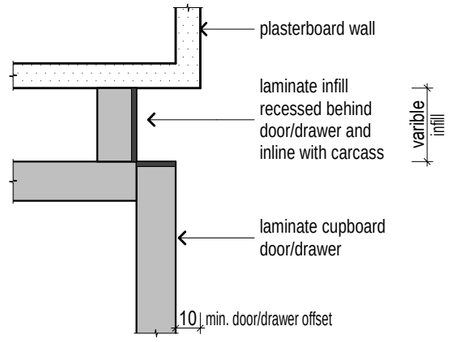

OPTINF001 | END INFILL PROFILE | RECESSED

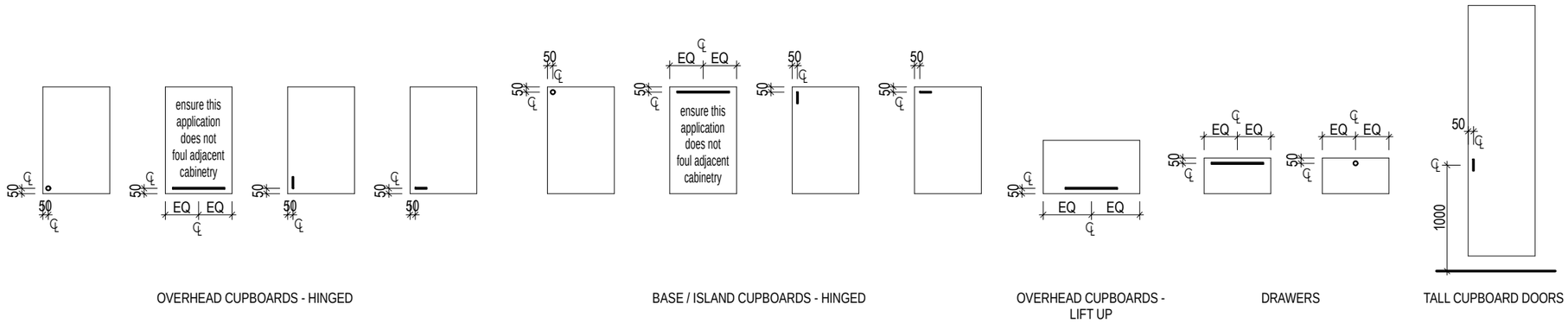

OVERHEAD CUPBOARDS - HINGED

BASE / ISLAND CUPBOARDS - HINGED

OVERHEAD CUPBOARDS - LIFT UP

DRAWERS

TALL CUPBOARD DOORS

OPTHDW001 | TYPICAL CABINETRY HANDLE LOCATIONS

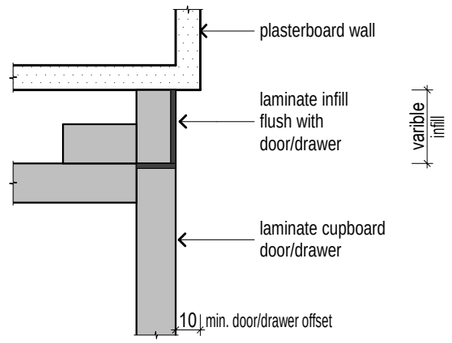

OPTINF002 | END INFILL PROFILE | FLUSH

BY: TQC | ISSUED: 03/11/2024 | REV: 10

© HENLEY ARCH P/L
ALL RIGHTS RESERVED. THIS SET OF DRAWINGS IS COPYRIGHT. APART FROM ANY FAIR DEALING AS PERMITTED UNDER THE COPYRIGHT ACT NO PART MAY BE USED, REPRODUCED OR COPIED BY ANY MEANS OR IN ANY FORM WITHOUT PRIOR PERMISSION OF HENLEY ARCH P/L.
THERE IS NO COPYRIGHT LICENCE, EXPRESS OR IMPLIED, GRANTED WITH RESPECT TO THESE DRAWINGS, ONLY HENLEY ARCH P/L OR ITS SUBSIDIARIES MAY BUILD A HOUSE WHICH REPRODUCES THESE DRAWINGS.
THE SIGNED FINAL DRAWINGS WILL TAKE PRECEDENCE AND WILL DIFFER FROM THE DISPLAY HOME DRAWINGS AND THE SIGNED CONTRACT DRAWINGS GIVEN ON GOING PRODUCTION CHANGES.

KITCHEN DETAILS | 5B | LH

SCALE	1:1, 1:50, 1:5
DATE DRN	21/08/2024
DRAWN BY	PV
JOB NUMBER	704031

Abington 345-D37 — **Watego**

CLIENT
QLD READYBUILT
LOT 142, CALLI AVENUE
UPPER COOMERA

* TILE HEIGHTS ARE NOMINAL ONLY. FINISHED TILE HEIGHTS MAY VARY BASED ON SELECTED TILES.
* ALL APPLIANCE DIMENSIONS AND VENTING TO BE CONFIRMED BY CABINET MAKER FROM THE RELEVANT INSTALLATION/ SPECIFICATION MANUAL.
* HEIGHTS TO REF. SPACE ARE FROM SLAB FLOOR LEVEL & DO NOT ALLOW FOR FLOOR COVERINGS.
* FALLS TO FLOOR WASTES WILL BE MIN. 1:80 & MAX. 1:50 (LOCATIONS ARE NOMINAL).
* ALL CUPBOARD DIMENSIONS TO BE CONFIRMED BY SITE MEASURE.
* DIMENSIONS TO SPOUTS & TAPS/MIXERS ARE NOMINAL ONLY AND MAY VARY SLIGHTLY ON SITE.
* DETAILS ARE TO BE USED AS A GUIDE ONLY. ALL CABINETRY CONSTRUCTION MUST MEET THE REQUIREMENTS OF AS 4386.

DENOTES WALL TILES, UNLESS NOTED OTHERWISE. REFER TO INTERNALS

READY BUILT by Plantation Homes
A DIVISION OF HENLEY PROPERTIES (QLD) PTY LTD
3354 PACIFIC HIGHWAY, SPRINGWOOD
Ph: (07) 3290 8888 Fax: (07) 3290 8899

CABINETRY SCHEDULE | KITCHEN

CABINET TYPE	CABINET STYLE	BENCHTOP PROFILE	SHADOW PROFILE	SUBSTRATE INFILL PROFILE	END INFILL PROFILE	TOP INFILL PROFILE	END PANEL PROFILE	DOOR BOTTOM PROFILE	BENCHTOP HEIGHT	CARCASS HEIGHT	KICKER HEIGHT	KICKER O'HANG FRONT	KICKER O'HANG LEFT	KICKER O'HANG RIGHT	O/A SUBSTRATE THICKNESS
2 Drawer Unit	Island	20mm VCS	16mm	-	-	-	Hidden	-	915mm	728mm	142mm	34mm	-	-	25mm
4 Drawer Unit	Island	20mm VCS	16mm	-	-	-	Hidden	-	915mm	728mm	142mm	34mm	-	-	25mm
Cabinet 2 Door	Base	20mm VCS	16mm	-	-	-	Exposed	-	915mm	728mm	142mm	34mm	-	-	25mm
Cabinet 2 Door	Base	20mm VCS	16mm	-	Flush	-	-	-	915mm	728mm	142mm	34mm	-	-	25mm
Cabinet 2 Door	Island	20mm VCS	16mm	-	-	-	Hidden	-	915mm	728mm	142mm	34mm	-	-	25mm
Dishwasher Unit	Island	20mm VCS	16mm	-	-	-	-	-	915mm	-	-	-	-	-	25mm
Overhead 2 Door	Overhead	-	-	-	-	32mm Recessed	Hidden	10mm	-	588mm	-	-	-	-	-
Overhead 2 Door	Overhead	-	-	-	Flush	32mm Recessed	-	10mm	-	588mm	-	-	-	-	-
Overhead Fridge	Overhead	-	-	-	Flush	32mm Recessed	-	10mm	-	400mm	-	-	-	-	-
Upright Oven Unit	Base	20mm VCS	-	-	-	-	-	-	915mm	-	-	-	-	-	25mm

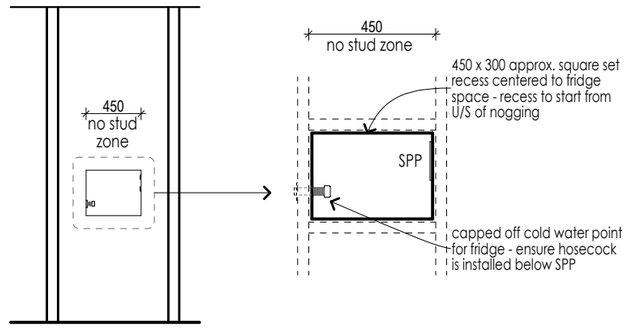

PART FRONT VIEW

DETAIL

PLB_WA003 | FRIDGE RECESS | CAPPED COLD WATER POINT & SINGLE POWER POINT

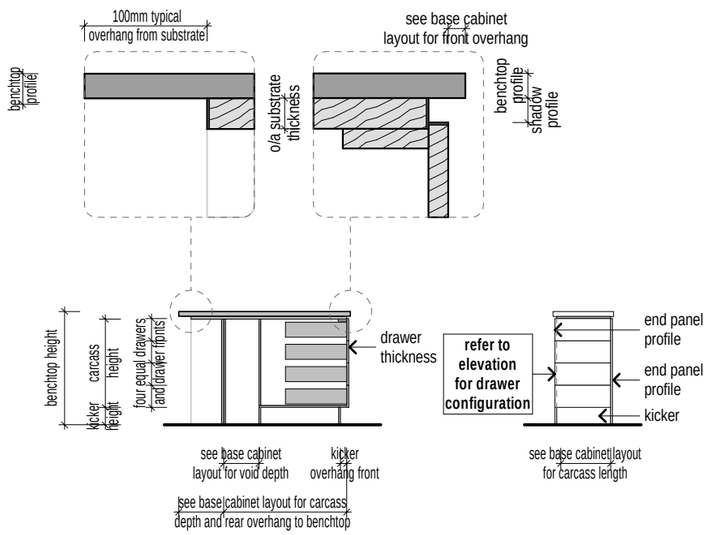

DRAWER CARCASS SECTION

DRAWER CUPBOARD ELEVATION WITH END PANEL (reference only)

CISL031 | CABINET STYLE | ISLAND WITH VOID & DRAWERS

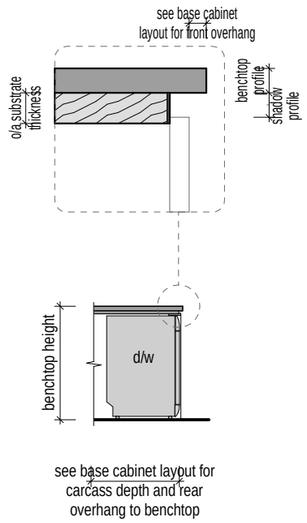

DISHWASHER SPACE SECTION

CISL015 | CABINET STYLE | DISHWASHER

PMT

FINAL DRAWINGS

CHECKED BY: JL EXT No.

CHECKED TO:

DATE: 24/10/24

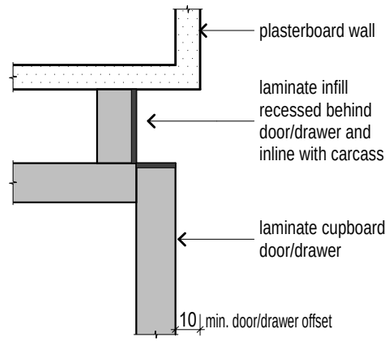

OPTINF001 | END INFILL PROFILE | RECESSED

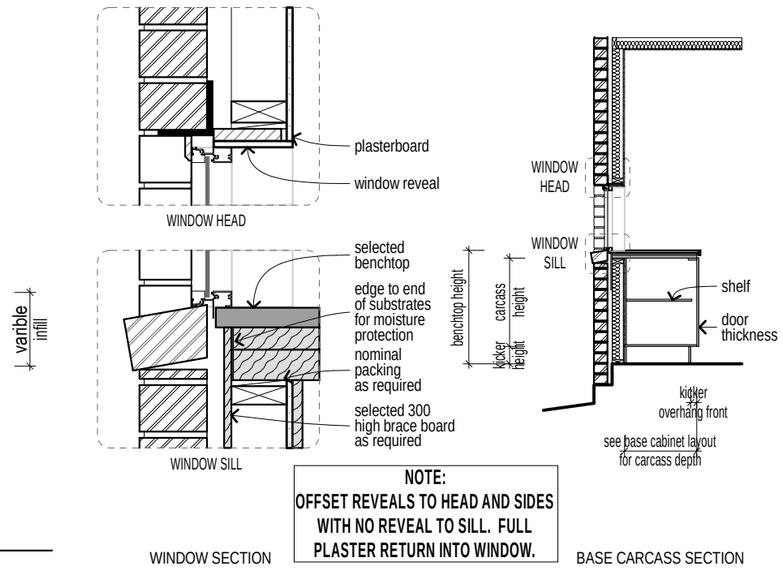

NOTE:
OFFSET REVEALS TO HEAD AND SIDES WITH NO REVEAL TO SILL. FULL PLASTER RETURN INTO WINDOW.

WINDOW SECTION

BASE CARCASS SECTION

CBAS005 | CABINET STYLE | BASE WITH ALUMINIUM WINDOW SPLASHBACK

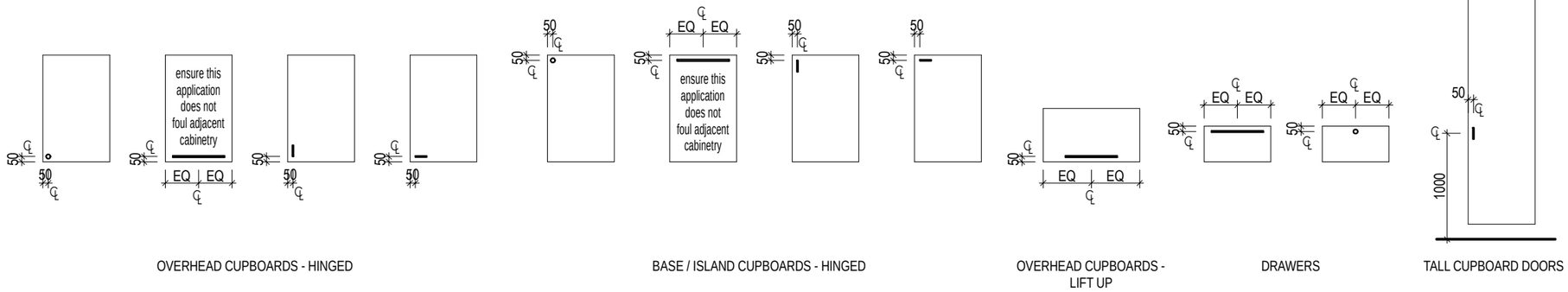

OVERHEAD CUPBOARDS - HINGED

BASE / ISLAND CUPBOARDS - HINGED

OVERHEAD CUPBOARDS - LIFT UP

DRAWERS

TALL CUPBOARD DOORS

OPTHDW001 | TYPICAL CABINETRY HANDLE LOCATIONS

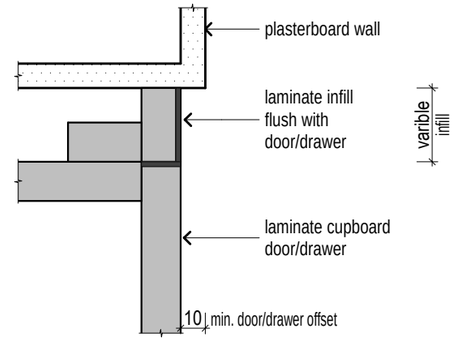

OPTINF002 | END INFILL PROFILE | FLUSH

BY: TQC | ISSUED: 03/11/2024 | REV: 10

© HENLEY ARCH P/L
ALL RIGHTS RESERVED. THIS SET OF DRAWINGS IS COPYRIGHT. APART FROM ANY FAIR DEALING AS PERMITTED UNDER THE COPYRIGHT ACT NO PART MAY BE USED, REPRODUCED OR COPIED BY ANY MEANS OR IN ANY FORM WITHOUT PRIOR PERMISSION OF HENLEY ARCH P/L.
THERE IS NO COPYRIGHT LICENCE, EXPRESS OR IMPLIED, GRANTED WITH RESPECT TO THESE DRAWINGS. ONLY HENLEY ARCH P/L OR ITS SUBSIDIARIES MAY BUILD A HOUSE WHICH REPRODUCES THESE DRAWINGS.
THE SIGNED FINAL DRAWINGS WILL TAKE PRECEDENCE AND WILL DIFFER FROM THE DISPLAY HOME DRAWINGS AND THE SIGNED CONTRACT DRAWINGS GIVEN ON GOING PRODUCTION CHANGES.

KITCHEN DETAILS

5C	LH
SCALE	1:1, 1:50, 1:5
DATE DRN	21/08/2024
DRAWN BY	PV
JOB NUMBER	704031

Abington 345-D37 **Watego**

CLIENT

QLD READYBUILT
LOT 142, CALLI AVENUE
UPPER COOMERA

* TILE HEIGHTS ARE NOMINAL ONLY. FINISHED TILE HEIGHTS MAY VARY BASED ON SELECTED TILES.
* ALL APPLIANCE DIMENSIONS AND VENTING TO BE CONFIRMED BY CABINET MAKER FROM THE RELEVANT INSTALLATION/ SPECIFICATION MANUAL.
* HEIGHTS TO REF. SPACE ARE FROM SLAB FLOOR LEVEL & DO NOT ALLOW FOR FLOOR COVERINGS.
* FALLS TO FLOOR WASTES WILL BE MIN. 1:80 & MAX. 1:50 (LOCATIONS ARE NOMINAL).
* ALL CUPBOARD DIMENSIONS TO BE CONFIRMED BY SITE MEASURE.
* DIMENSIONS TO SPOUTS & TAPS/MIXERS ARE NOMINAL ONLY AND MAY VARY SLIGHTLY ON SITE.
* DETAILS ARE TO BE USED AS A GUIDE ONLY. ALL CABINETRY CONSTRUCTION MUST MEET THE REQUIREMENTS OF AS 4386.

DENOTES WALL TILES, UNLESS NOTED OTHERWISE. REFER TO INTERNALS

READY BUILT by Plantation Homes
A DIVISION OF HENLEY PROPERTIES (QLD) PTY LTD
3354 PACIFIC HIGHWAY, SPRINGWOOD
Ph: (07) 3290 8888 Fax: (07) 3290 8899

SHELVING | PANTRY

ROOM NAME	LOCATION	OVERALL SHELF HEIGHT	OVERALL SHELF DEPTH/S	SHELF HEIGHTS FROM FLOOR	SHELF FASCIA PROFILE	SHELF SUPPORT STYLE	SHELF THICKNESS	BENCHTOP HEIGHT	BENCHTOP PROILE
KITCHEN									
	BUTLER'S PANTRY	1960mm	450/450/300/300mm 300/300/300/300mm	450/915/1640/1960mm	70x16mm	-	16mm	-	-
	BUTLER'S PANTRY	1960mm	450/600/300/300mm	450/915/1640/1960mm	70x16mm	-	16mm	915mm	32mm Laminate

PMT

FINAL DRAWINGS

CHECKED BY: JL EXT No.
CHECKED TO:
DATE: 24/10/24

ALL SUPPORTS TO BE FIXED INTO FRAME. TRIANGULAR SUPPORTS TO BE FIXED OVER A STUD AT AS CLOSE TO EQUAL SPACINGS ALONG THE WALL RUN AS POSSIBLE.

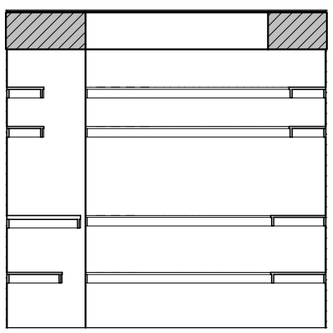

BUTLERS PANTRY VIEW A

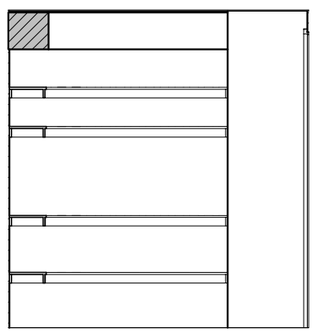

BUTLERS PANTRY VIEW B

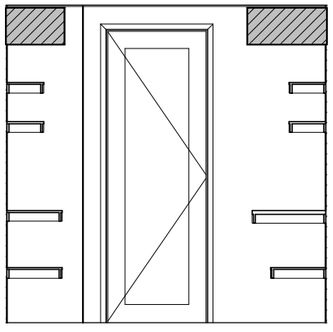

BUTLERS PANTRY VIEW C

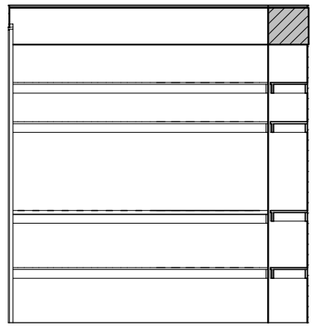

BUTLERS PANTRY VIEW D

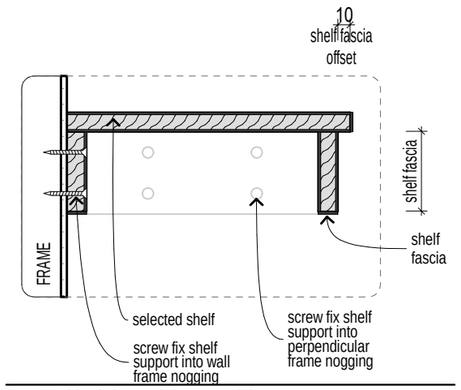

SHLFTYP001 | SHELF | SHELF FASCIA DETAIL

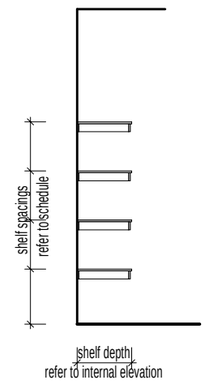

SECTION

SHLFTYP002 | PANTRY SHELF DETAIL

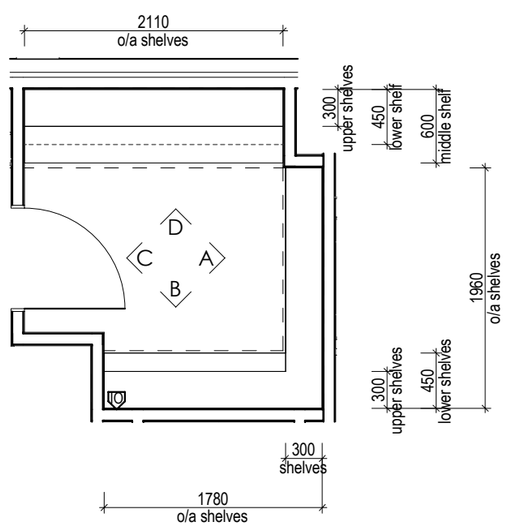

BUTLERS PANTRY BASE CABINET LAYOUT

BY: TQC | ISSUED: 03/11/2024 | REV: 10

© HENLEY ARCH P/L
ALL RIGHTS RESERVED. THIS SET OF DRAWINGS IS COPYRIGHT. APART FROM ANY FAIR DEALING AS PERMITTED UNDER THE COPYRIGHT ACT NO PART MAY BE USED, REPRODUCED OR COPIED BY ANY MEANS OR IN ANY FORM WITHOUT PRIOR PERMISSION OF HENLEY ARCH P/L.
THERE IS NO COPYRIGHT LICENCE, EXPRESS OR IMPLIED, GRANTED WITH RESPECT TO THESE DRAWINGS, ONLY HENLEY ARCH P/L OR ITS SUBSIDIARIES MAY BUILD A HOUSE WHICH REPRODUCES THESE DRAWINGS.

THE SIGNED FINAL DRAWINGS WILL TAKE PRECEDENCE AND WILL DIFFER FROM THE DISPLAY HOME DRAWINGS AND THE SIGNED CONTRACT DRAWINGS GIVEN ON GOING PRODUCTION CHANGES.

INTERNALS - B. PANTRY | **5D** | **LH**

SCALE	1:50, 1:1
DATE DRN	21/08/2024
DRAWN BY	PV
JOB NUMBER	704031

Abington 345-D37 **Watego**

CLIENT
QLD READYBUILT
LOT 142, CALLI AVENUE
UPPER COOMERA

* TILE HEIGHTS ARE NOMINAL ONLY. FINISHED TILE HEIGHTS MAY VARY BASED ON SELECTED TILES.
* ALL APPLIANCE DIMENSIONS AND VENTING TO BE CONFIRMED BY CABINET MAKER FROM THE RELEVANT INSTALLATION/ SPECIFICATION MANUAL.
* HEIGHTS TO REF. SPACE ARE FROM SLAB FLOOR LEVEL & DO NOT ALLOW FOR FLOOR COVERINGS.
* FALLS TO FLOOR WASTES WILL BE MIN. 1:80 & MAX. 1:50 (LOCATIONS ARE NOMINAL).
* ALL CUPBOARD DIMENSIONS TO BE CONFIRMED BY SITE MEASURE.
* DIMENSIONS TO SPOUTS & TAPS/MIXERS ARE NOMINAL ONLY AND MAY VARY SLIGHTLY ON SITE.
* DETAILS ARE TO BE USED AS A GUIDE ONLY. ALL CABINETRY CONSTRUCTION MUST MEET THE REQUIREMENTS OF AS 4386.

DENOTES WALL TILES, UNLESS NOTED OTHERWISE. REFER TO INTERNALS

READY BUILT by Plantation Homes
A DIVISION OF HENLEY PROPERTIES (QLD) PTY LTD
3354 PACIFIC HIGHWAY, SPRINGWOOD
Ph: (07) 3290 8888 Fax: (07) 3290 8899

CABINETRY SCHEDULE | LAUNDRY															
CABINET TYPE	CABINET STYLE	BENCHTOP PROFILE	SHADOW PROFILE	SUBSTRATE INFILL PROFILE	END INFILL PROFILE	TOP INFILL PROFILE	END PANEL PROFILE	DOOR BOTTOM PROFILE	BENCHTOP HEIGHT	CARCASS HEIGHT	KICKER HEIGHT	KICKER O'HANG FRONT	KICKER O'HANG LEFT	KICKER O'HANG RIGHT	O/A SUBSTRATE THICKNESS
Cabinet 2 Door	Base	32mm Laminate	-	-	-	-	Hidden	-	935mm	761mm	142mm	34mm	-	-	-
Open Cabinet	Base	32mm Laminate	-	-	-	-	Exposed	-	935mm	-	-	-	-	-	-

PMT

FINAL DRAWINGS

CHECKED BY: JL EXT No.
CHECKED TO:
DATE: 24/10/24

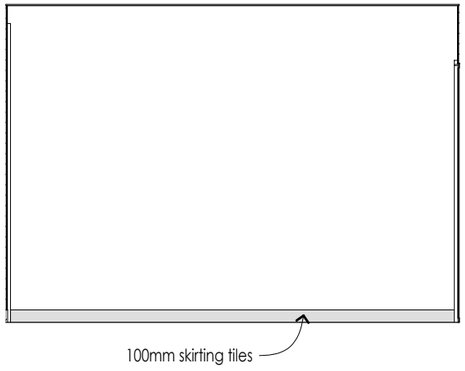

LAUNDRY VIEW A

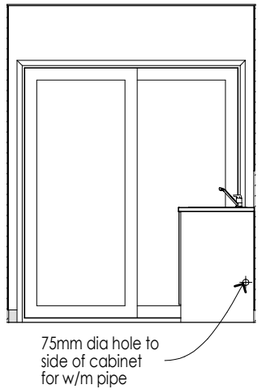

LAUNDRY VIEW B

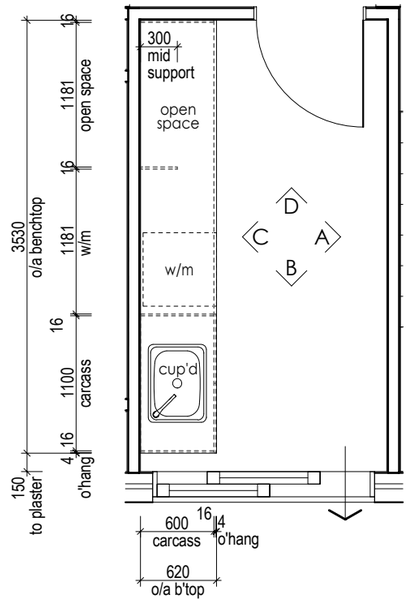

LAUNDRY BASE CABINET LAYOUT

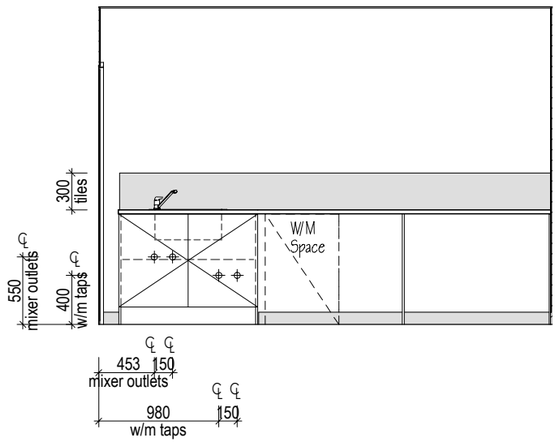

LAUNDRY VIEW C

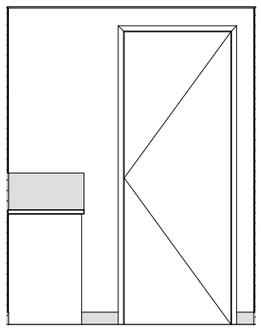

LAUNDRY VIEW D

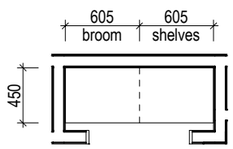

BROOM / LINEN CABINET LAYOUT

BY: TQC | ISSUED: 03/11/2024 | REV: 10

© HENLEY ARCH P/L
ALL RIGHTS RESERVED. THIS SET OF DRAWINGS IS COPYRIGHT. APART FROM ANY FAIR DEALING AS PERMITTED UNDER THE COPYRIGHT ACT NO PART MAY BE USED, REPRODUCED OR COPIED BY ANY MEANS OR IN ANY FORM WITHOUT PRIOR PERMISSION OF HENLEY ARCH P/L.
THERE IS NO COPYRIGHT LICENCE, EXPRESS OR IMPLIED, GRANTED WITH RESPECT TO THESE DRAWINGS, ONLY HENLEY ARCH P/L OR ITS SUBSIDIARIES MAY BUILD A HOUSE WHICH REPRODUCES THESE DRAWINGS.

THE SIGNED FINAL DRAWINGS WILL TAKE PRECEDENCE AND WILL DIFFER FROM THE DISPLAY HOME DRAWINGS AND THE SIGNED CONTRACT DRAWINGS GIVEN ON GOING PRODUCTION CHANGES.

INTERNALS - LAUNDRY | **5E** | **LH**

SCALE	1:50, 1:1
DATE DRN	21/08/2024
DRAWN BY	PV
JOB NUMBER	704031

CLIENT

Abington 345-D37 **Watego**

QLD READYBUILT
LOT 142, CALLI AVENUE
UPPER COOMERA

* TILE HEIGHTS ARE NOMINAL ONLY. FINISHED TILE HEIGHTS MAY VARY BASED ON SELECTED TILES.
* ALL APPLIANCE DIMENSIONS AND VENTING TO BE CONFIRMED BY CABINET MAKER FROM THE RELEVANT INSTALLATION/ SPECIFICATION MANUAL.
* HEIGHTS TO REF. SPACE ARE FROM SLAB FLOOR LEVEL & DO NOT ALLOW FOR FLOOR COVERINGS.
* FALLS TO FLOOR WASTES WILL BE MIN. 1:80 & MAX. 1:50 (LOCATIONS ARE NOMINAL).
* ALL CUPBOARD DIMENSIONS TO BE CONFIRMED BY SITE MEASURE.
* DIMENSIONS TO SPOUTS & TAPS/MIXERS ARE NOMINAL ONLY AND MAY VARY SLIGHTLY ON SITE.
* DETAILS ARE TO BE USED AS A GUIDE ONLY. ALL CABINETRY CONSTRUCTION MUST MEET THE REQUIREMENTS OF AS 4386.

DENOTES WALL TILES, UNLESS NOTED OTHERWISE. REFER TO INTERNALS

READY BUILT by Plantation Homes

A DIVISION OF HENLEY PROPERTIES (QLD) PTY LTD
3354 PACIFIC HIGHWAY, SPRINGWOOD
Ph: (07) 3290 8888 Fax: (07) 3290 8899

CABINETRY SCHEDULE | LAUNDRY															
CABINET TYPE	CABINET STYLE	BENCHTOP PROFILE	SHADOW PROFILE	SUBSTRATE INFILL PROFILE	END INFILL PROFILE	TOP INFILL PROFILE	END PANEL PROFILE	DOOR BOTTOM PROFILE	BENCHTOP HEIGHT	CARCASS HEIGHT	KICKER HEIGHT	KICKER O'HANG FRONT	KICKER O'HANG LEFT	KICKER O'HANG RIGHT	O/A SUBSTRATE THICKNESS
Cabinet 2 Door	Base	32mm Laminate	-	-	-	-	Hidden	-	935mm	761mm	142mm	34mm	-	-	-
Open Cabinet	Base	32mm Laminate	-	-	-	-	Exposed	-	935mm	-	-	-	-	-	-

PMT

FINAL DRAWINGS

CHECKED BY: JL EXT No.
CHECKED TO:
DATE: 24/10/24

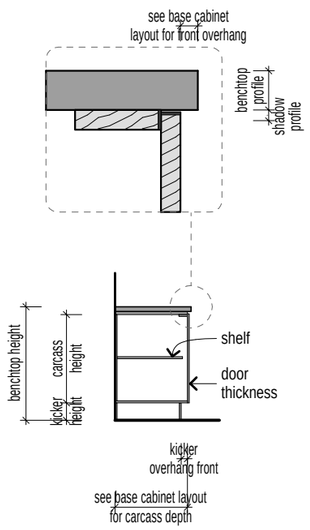

BASE CARCASS SECTION

CBAS001 | CABINET STYLE | BASE

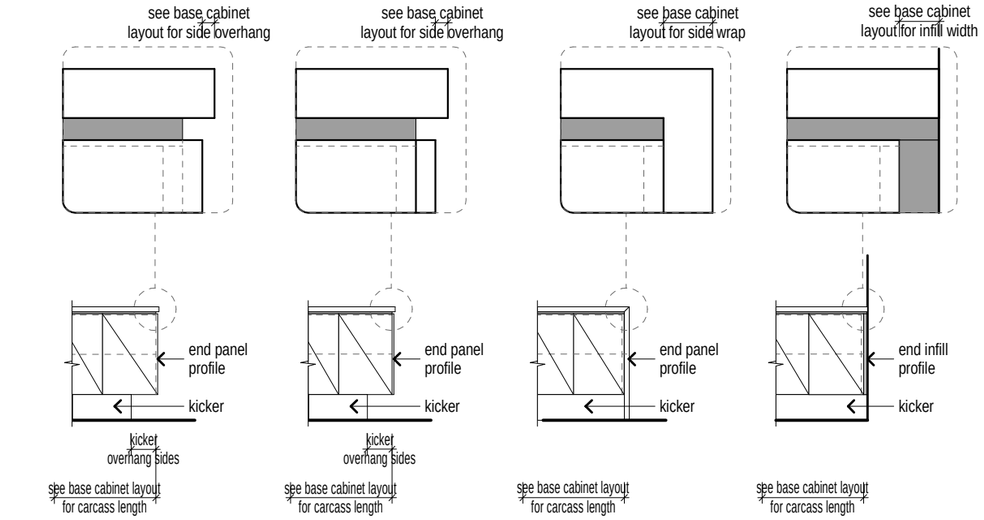

ELEVATION WITH HIDDEN PANEL (reference only) | ELEVATION WITH EXPOSED PANEL (reference only) | ELEVATION WITH END WRAP (reference only) | ELEVATION WITH END INFILL (reference only)

CELP001 | CABINET ELEVATION WITH KICKER

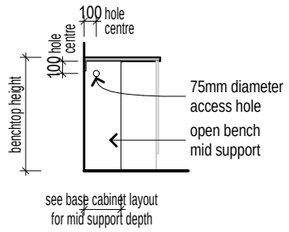

OPEN BENCH SECTION

CELP004 | OPEN CABINET ELEVATION WITH PENETRATION

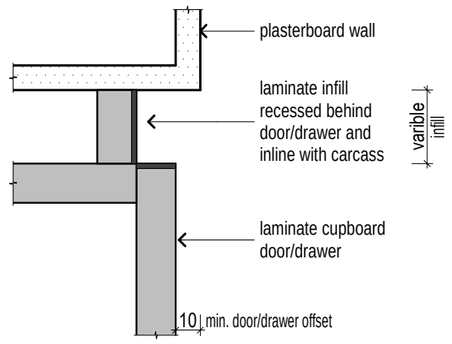

OPTINF001 | END INFILL PROFILE | RECESSED

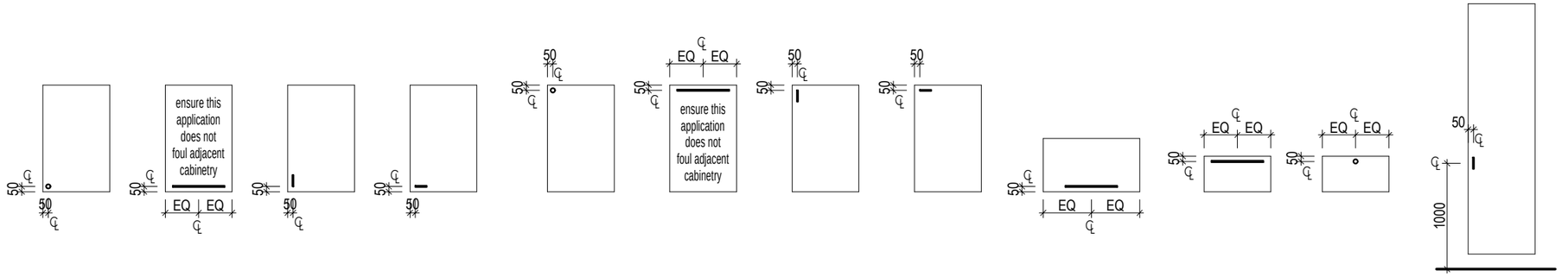

OVERHEAD CUPBOARDS - HINGED | BASE / ISLAND CUPBOARDS - HINGED | OVERHEAD CUPBOARDS - LIFT UP | DRAWERS | TALL CUPBOARD DOORS

OPTHDW001 | TYPICAL CABINETRY HANDLE LOCATIONS

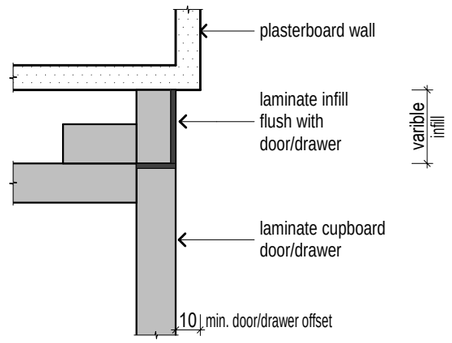

OPTINF002 | END INFILL PROFILE | FLUSH

BY: TQC | ISSUED: 03/11/2024 | REV: 10

© HENLEY ARCH P/L
ALL RIGHTS RESERVED. THIS SET OF DRAWINGS IS COPYRIGHT. APART FROM ANY FAIR DEALING AS PERMITTED UNDER THE COPYRIGHT ACT NO PART MAY BE USED, REPRODUCED OR COPIED BY ANY MEANS OR IN ANY FORM WITHOUT PRIOR PERMISSION OF HENLEY ARCH P/L.
THERE IS NO COPYRIGHT LICENCE, EXPRESS OR IMPLIED, GRANTED WITH RESPECT TO THESE DRAWINGS. ONLY HENLEY ARCH P/L OR ITS SUBSIDIARIES MAY BUILD A HOUSE WHICH REPRODUCES THESE DRAWINGS.

THE SIGNED FINAL DRAWINGS WILL TAKE PRECEDENCE AND WILL DIFFER FROM THE DISPLAY HOME DRAWINGS AND THE SIGNED CONTRACT DRAWINGS GIVEN ON GOING PRODUCTION CHANGES.

LAUNDRY DETAILS | 5F | LH

SCALE	1:1, 1:50, 1:5
DATE DRN	21/08/2024
DRAWN BY	PV
JOB NUMBER	704031

Abington 345-D37 **Watego**

CLIENT
QLD READYBUILT
LOT 142, CALLI AVENUE
UPPER COOMERA

* TILE HEIGHTS ARE NOMINAL ONLY. FINISHED TILE HEIGHTS MAY VARY BASED ON SELECTED TILES.
* ALL APPLIANCE DIMENSIONS AND VENTING TO BE CONFIRMED BY CABINET MAKER FROM THE RELEVANT INSTALLATION/ SPECIFICATION MANUAL.
* HEIGHTS TO REF. SPACE ARE FROM SLAB FLOOR LEVEL & DO NOT ALLOW FOR FLOOR COVERINGS.
* FALLS TO FLOOR WASTES WILL BE MIN. 1:80 & MAX. 1:50 (LOCATIONS ARE NOMINAL).
* ALL CUPBOARD DIMENSIONS TO BE CONFIRMED BY SITE MEASURE.
* DIMENSIONS TO SPOUTS & TAPS/MIXERS ARE NOMINAL ONLY AND MAY VARY SLIGHTLY ON SITE.
* DETAILS ARE TO BE USED AS A GUIDE ONLY. ALL CABINETRY CONSTRUCTION MUST MEET THE REQUIREMENTS OF AS 4386.

DENOTES WALL TILES, UNLESS NOTED OTHERWISE. REFER TO INTERNALS

READY BUILT by Plantation Homes
A DIVISION OF HENLEY PROPERTIES (QLD) PTY LTD
3354 PACIFIC HIGHWAY, SPRINGWOOD
Ph: (07) 3290 8888 Fax: (07) 3290 8899

CABINETRY SCHEDULE | WET AREAS																	
	CABINET TYPE	CABINET STYLE	BENCHTOP PROFILE	SHADOW PROFILE	SUBSTRATE INFILL PROFILE	TOP INFILL PROFILE	END INFILL PROFILE	END PANEL PROFILE	DOOR BOTTOM PROFILE	BENCHTOP HEIGHT	CARCASS HEIGHT	FACE PANEL HEIGHT	KICKER HEIGHT	KICKER O'HANG FRONT	KICKER O'HANG LEFT	KICKER O'HANG RIGHT	O/A SUBSTRATE THICKNESS
BATH																	
	Vanity Cabinet	Base	20mm VCS	16mm	-	-	-	Hidden	-	850mm	595mm	-	210mm	184mm	200mm	200mm	25mm
ENS																	
	Vanity Cabinet	Base	20mm VCS	16mm	-	-	-	Hidden	-	850mm	595mm	-	210mm	184mm	200mm	200mm	25mm
ENS 2																	
	Vanity Cabinet	Base	20mm VCS	16mm	-	-	-	Hidden	-	850mm	595mm	-	210mm	184mm	200mm	200mm	25mm

PMT

FINAL DRAWINGS

CHECKED BY: JL EXT No.
CHECKED TO:
DATE: 24/10/24

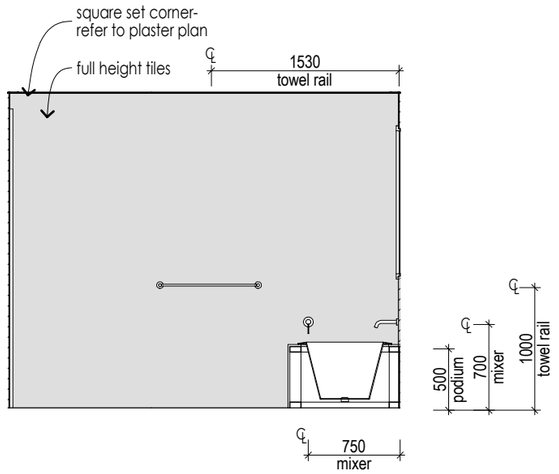

BATHROOM VIEW A

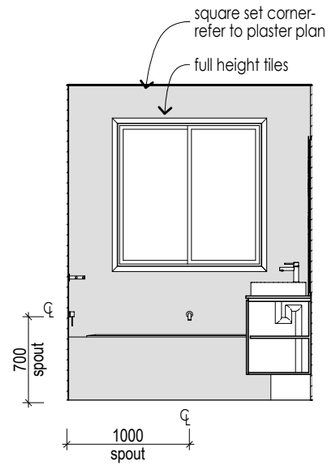

BATHROOM VIEW B

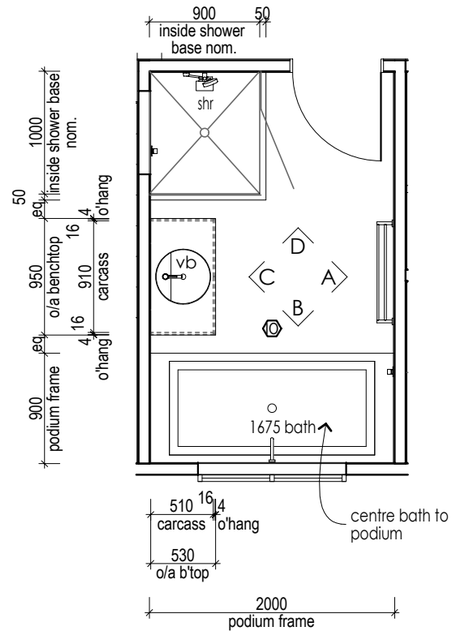

BATHROOM BASE CABINET LAYOUT

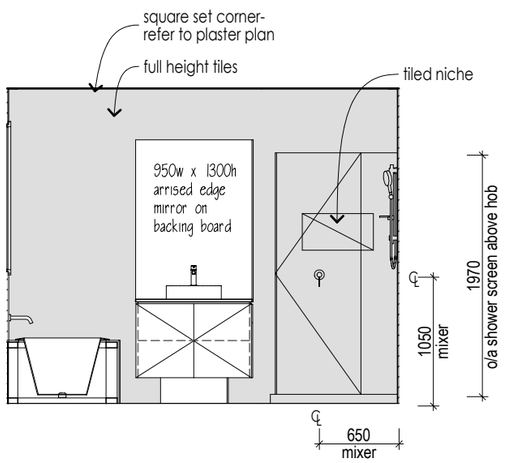

BATHROOM VIEW C

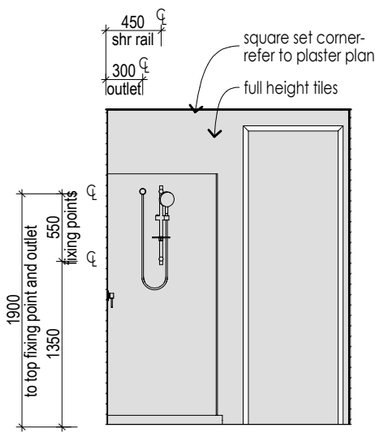

BATHROOM VIEW D

BY: TQC | ISSUED: 03/11/2024 | REV: 10

© HENLEY ARCH P/L
ALL RIGHTS RESERVED. THIS SET OF DRAWINGS IS COPYRIGHT. APART FROM ANY FAIR DEALING AS PERMITTED UNDER THE COPYRIGHT ACT NO PART MAY BE USED, REPRODUCED OR COPIED BY ANY MEANS OR IN ANY FORM WITHOUT PRIOR PERMISSION OF HENLEY ARCH P/L.
THERE IS NO COPYRIGHT LICENCE, EXPRESS OR IMPLIED, GRANTED WITH RESPECT TO THESE DRAWINGS, ONLY HENLEY ARCH P/L OR ITS SUBSIDIARIES MAY BUILD A HOUSE WHICH REPRODUCES THESE DRAWINGS.

THE SIGNED FINAL DRAWINGS WILL TAKE PRECEDENCE AND WILL DIFFER FROM THE DISPLAY HOME DRAWINGS AND THE SIGNED CONTRACT DRAWINGS GIVEN ON GOING PRODUCTION CHANGES.

INTERNALS - BATHROOM | **5G** | **LH**

SCALE	1:50, 1:1
DATE DRN	21/08/2024
DRAWN BY	PV
JOB NUMBER	704031

CLIENT

Abington 345-D37 **Watego**

QLD READYBUILT
LOT 142, CALLI AVENUE
UPPER COOMERA

* TILE HEIGHTS ARE NOMINAL ONLY. FINISHED TILE HEIGHTS MAY VARY BASED ON SELECTED TILES.
* ALL APPLIANCE DIMENSIONS AND VENTING TO BE CONFIRMED BY CABINET MAKER FROM THE RELEVANT INSTALLATION/ SPECIFICATION MANUAL.
* HEIGHTS TO REF. SPACE ARE FROM SLAB FLOOR LEVEL & DO NOT ALLOW FOR FLOOR COVERINGS.
* FALLS TO FLOOR WASTES WILL BE MIN. 1:80 & MAX. 1:50 (LOCATIONS ARE NOMINAL).
* ALL CUPBOARD DIMENSIONS TO BE CONFIRMED BY SITE MEASURE.
* DIMENSIONS TO SPOUTS & TAPS/MIXERS ARE NOMINAL ONLY AND MAY VARY SLIGHTLY ON SITE.
* DETAILS ARE TO BE USED AS A GUIDE ONLY. ALL CABINETRY CONSTRUCTION MUST MEET THE REQUIREMENTS OF AS 4386.

DENOTES WALL TILES, UNLESS NOTED OTHERWISE. REFER TO INTERNALS

READY BUILT by Plantation Homes
A DIVISION OF HENLEY PROPERTIES (QLD) PTY LTD
3354 PACIFIC HIGHWAY, SPRINGWOOD
Ph: (07) 3290 8888 Fax: (07) 3290 8899

CABINETRY SCHEDULE | WET AREAS																	
	CABINET TYPE	CABINET STYLE	BENCHTOP PROFILE	SHADOW PROFILE	SUBSTRATE INFILL PROFILE	TOP INFILL PROFILE	END INFILL PROFILE	END PANEL PROFILE	DOOR BOTTOM PROFILE	BENCHTOP HEIGHT	CARCASS HEIGHT	FACE PANEL HEIGHT	KICKER HEIGHT	KICKER O'HANG FRONT	KICKER O'HANG LEFT	KICKER O'HANG RIGHT	O/A SUBSTRATE THICKNESS
BATH																	
	Vanity Cabinet	Base	20mm VCS	16mm	-	-	-	Hidden	-	850mm	595mm	-	210mm	184mm	200mm	200mm	25mm
ENS																	
	Vanity Cabinet	Base	20mm VCS	16mm	-	-	-	Hidden	-	850mm	595mm	-	210mm	184mm	200mm	200mm	25mm
ENS 2																	
	Vanity Cabinet	Base	20mm VCS	16mm	-	-	-	Hidden	-	850mm	595mm	-	210mm	184mm	200mm	200mm	25mm

PMT

FINAL DRAWINGS

CHECKED BY: JL EXT No.
CHECKED TO:
DATE: 24/10/24

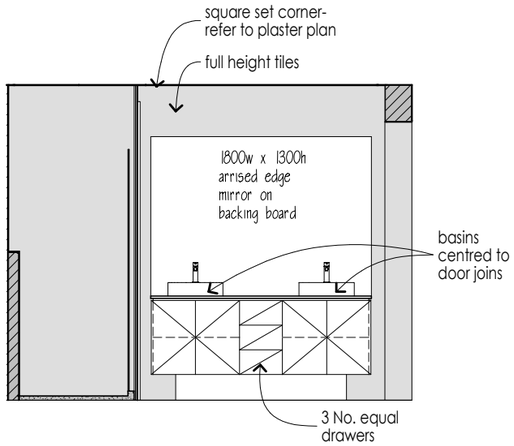

ENSUITE VIEW A

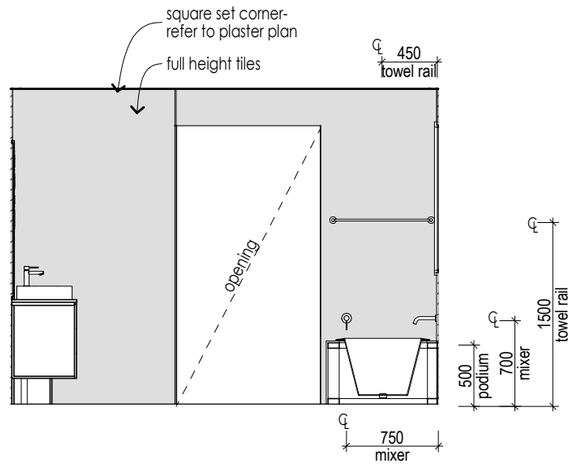

ENSUITE VIEW B

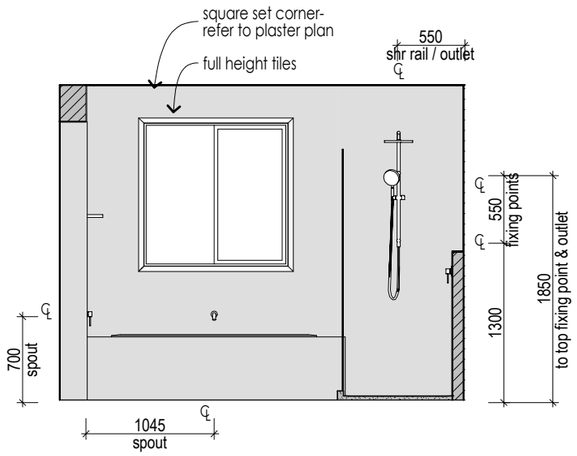

ENSUITE VIEW C

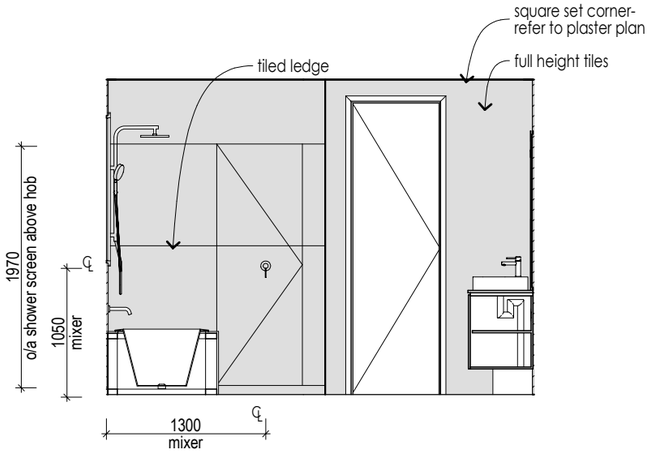

ENSUITE VIEW D

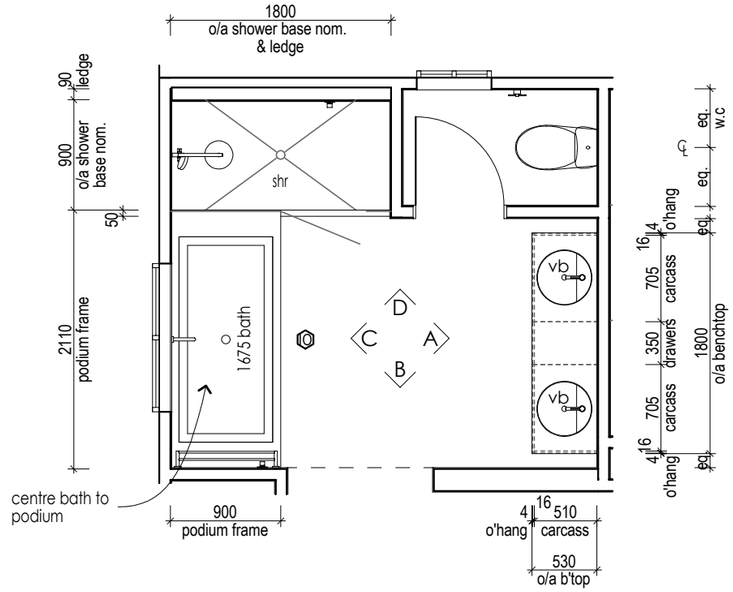

ENSUITE BASE CABINET LAYOUT

BY: TQC | ISSUED: 03/11/2024 | REV: 10

© HENLEY ARCH P/L
ALL RIGHTS RESERVED. THIS SET OF DRAWINGS IS COPYRIGHT. APART FROM ANY FAIR DEALING AS PERMITTED UNDER THE COPYRIGHT ACT NO PART MAY BE USED, REPRODUCED OR COPIED BY ANY MEANS OR IN ANY FORM WITHOUT PRIOR PERMISSION OF HENLEY ARCH P/L.
THERE IS NO COPYRIGHT LICENCE, EXPRESS OR IMPLIED, GRANTED WITH RESPECT TO THESE DRAWINGS. ONLY HENLEY ARCH P/L OR ITS SUBSIDIARIES MAY BUILD A HOUSE WHICH REPRODUCES THESE DRAWINGS.

THE SIGNED FINAL DRAWINGS WILL TAKE PRECEDENCE AND WILL DIFFER FROM THE DISPLAY HOME DRAWINGS AND THE SIGNED CONTRACT DRAWINGS GIVEN ON GOING PRODUCTION CHANGES.

INTERNALS - ENSUITE | **5H** | **LH**

SCALE	1:50, 1:1
DATE DRN	21/08/2024
DRAWN BY	PV
JOB NUMBER	704031

Abington 345-D37 **Watego**

CLIENT
QLD READYBUILT
LOT 142, CALLI AVENUE
UPPER COOMERA

* TILE HEIGHTS ARE NOMINAL ONLY. FINISHED TILE HEIGHTS MAY VARY BASED ON SELECTED TILES.
* ALL APPLIANCE DIMENSIONS AND VENTING TO BE CONFIRMED BY CABINET MAKER FROM THE RELEVANT INSTALLATION/ SPECIFICATION MANUAL.
* HEIGHTS TO REF. SPACE ARE FROM SLAB FLOOR LEVEL & DO NOT ALLOW FOR FLOOR COVERINGS.
* FALLS TO FLOOR WASTES WILL BE MIN. 1:80 & MAX. 1:50 (LOCATIONS ARE NOMINAL).
* ALL CUPBOARD DIMENSIONS TO BE CONFIRMED BY SITE MEASURE.
* DIMENSIONS TO SPOUTS & TAPS/MIXERS ARE NOMINAL ONLY AND MAY VARY SLIGHTLY ON SITE.
* DETAILS ARE TO BE USED AS A GUIDE ONLY. ALL CABINETRY CONSTRUCTION MUST MEET THE REQUIREMENTS OF AS 4386.

DENOTES WALL TILES, UNLESS NOTED OTHERWISE. REFER TO INTERNALS

READY BUILT by Plantation Homes
A DIVISION OF HENLEY PROPERTIES (QLD) PTY LTD
3354 PACIFIC HIGHWAY, SPRINGWOOD
Ph: (07) 3290 8888 Fax: (07) 3290 8899

CABINETRY SCHEDULE | WET AREAS																	
	CABINET TYPE	CABINET STYLE	BENCHTOP PROFILE	SHADOW PROFILE	SUBSTRATE INFILL PROFILE	TOP INFILL PROFILE	END INFILL PROFILE	END PANEL PROFILE	DOOR BOTTOM PROFILE	BENCHTOP HEIGHT	CARCASS HEIGHT	FACE PANEL HEIGHT	KICKER HEIGHT	KICKER O'HANG FRONT	KICKER O'HANG LEFT	KICKER O'HANG RIGHT	O/A SUBSTRATE THICKNESS
BATH																	
	Vanity Cabinet	Base	20mm VCS	16mm	-	-	-	Hidden	-	850mm	595mm	-	210mm	184mm	200mm	200mm	25mm
ENS																	
	Vanity Cabinet	Base	20mm VCS	16mm	-	-	-	Hidden	-	850mm	595mm	-	210mm	184mm	200mm	200mm	25mm
ENS 2																	
	Vanity Cabinet	Base	20mm VCS	16mm	-	-	-	Hidden	-	850mm	595mm	-	210mm	184mm	200mm	200mm	25mm

PMT

FINAL DRAWINGS

CHECKED BY: JL EXT No.
CHECKED TO:
DATE: 24/10/24

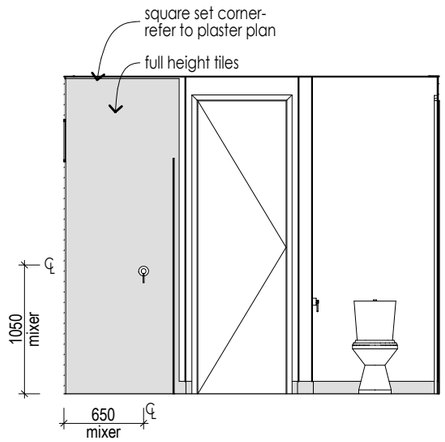

ENSUITE 2 VIEW A

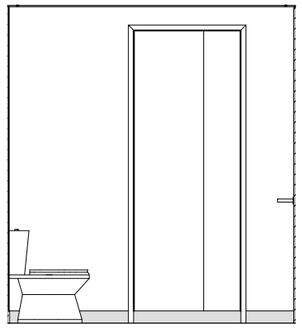

ENSUITE 2 VIEW B

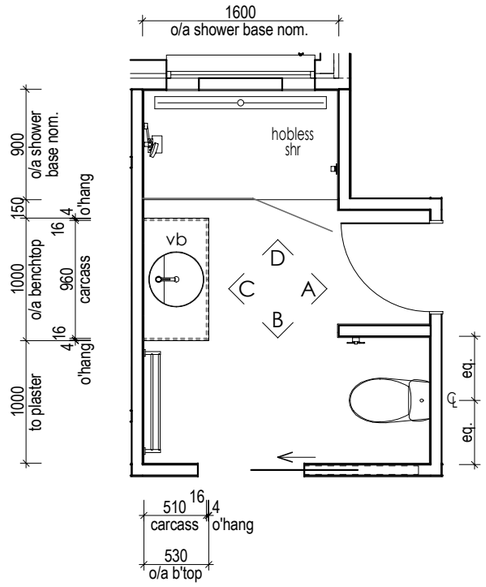

ENSUITE 2 BASE CABINET LAYOUT

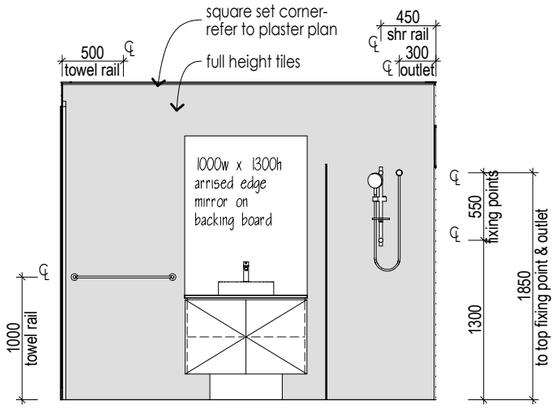

ENSUITE 2 VIEW C

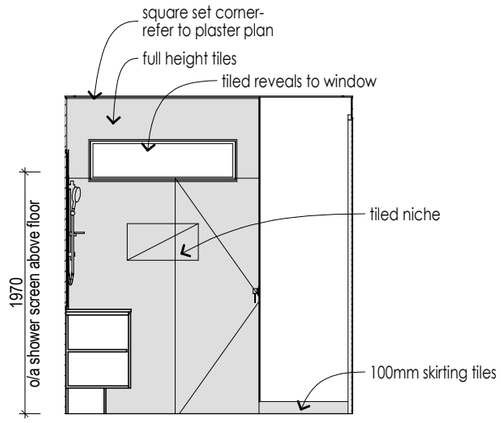

ENSUITE 2 VIEW D

BY: TQC | ISSUED: 03/11/2024 | REV: 10

© HENLEY ARCH P/L
ALL RIGHTS RESERVED. THIS SET OF DRAWINGS IS COPYRIGHT, APART FROM ANY FAIR DEALING AS PERMITTED UNDER THE COPYRIGHT ACT NO PART MAY BE USED, REPRODUCED OR COPIED BY ANY MEANS OR IN ANY FORM WITHOUT PRIOR PERMISSION OF HENLEY ARCH P/L.
THERE IS NO COPYRIGHT LICENCE, EXPRESS OR IMPLIED, GRANTED WITH RESPECT TO THESE DRAWINGS. ONLY HENLEY ARCH P/L OR ITS SUBSIDIARIES MAY BUILD A HOUSE WHICH REPRODUCES THESE DRAWINGS.

THE SIGNED FINAL DRAWINGS WILL TAKE PRECEDENCE AND WILL DIFFER FROM THE DISPLAY HOME DRAWINGS AND THE SIGNED CONTRACT DRAWINGS GIVEN ON GOING PRODUCTION CHANGES.

INTERNALS - ENSUITE 2 | **5I** | **LH**

SCALE	1:50, 1:1
DATE DRN	21/08/2024
DRAWN BY	PV
JOB NUMBER	704031

Abington 345-D37 **Watego**

CLIENT
QLD READYBUILT
LOT 142, CALLI AVENUE
UPPER COOMERA

* TILE HEIGHTS ARE NOMINAL ONLY. FINISHED TILE HEIGHTS MAY VARY BASED ON SELECTED TILES.
* ALL APPLIANCE DIMENSIONS AND VENTING TO BE CONFIRMED BY CABINET MAKER FROM THE RELEVANT INSTALLATION/ SPECIFICATION MANUAL.
* HEIGHTS TO REF. SPACE ARE FROM SLAB FLOOR LEVEL & DO NOT ALLOW FOR FLOOR COVERINGS.
* FALLS TO FLOOR WASTES WILL BE MIN. 1:80 & MAX. 1:50 (LOCATIONS ARE NOMINAL).
* ALL CUPBOARD DIMENSIONS TO BE CONFIRMED BY SITE MEASURE.
* DIMENSIONS TO SPOUTS & TAPS/MIXERS ARE NOMINAL ONLY AND MAY VARY SLIGHTLY ON SITE.
* DETAILS ARE TO BE USED AS A GUIDE ONLY. ALL CABINETRY CONSTRUCTION MUST MEET THE REQUIREMENTS OF AS 4386.

DENOTES WALL TILES, UNLESS NOTED OTHERWISE. REFER TO INTERNALS

READY BUILT by Plantation Homes

A DIVISION OF HENLEY PROPERTIES (QLD) PTY LTD
3354 PACIFIC HIGHWAY, SPRINGWOOD
Ph: (07) 3290 8888 Fax: (07) 3290 8899

CABINETRY SCHEDULE | WET AREAS																	
	CABINET TYPE	CABINET STYLE	BENCHTOP PROFILE	SHADOW PROFILE	SUBSTRATE INFILL PROFILE	TOP INFILL PROFILE	END INFILL PROFILE	END PANEL PROFILE	DOOR BOTTOM PROFILE	BENCHTOP HEIGHT	CARCASS HEIGHT	FACE PANEL HEIGHT	KICKER HEIGHT	KICKER O'HANG FRONT	KICKER O'HANG LEFT	KICKER O'HANG RIGHT	O/A SUBSTRATE THICKNESS
BATH																	
	Vanity Cabinet	Base	20mm VCS	16mm	-	-	-	Hidden	-	850mm	595mm	-	210mm	184mm	200mm	200mm	25mm
ENS																	
	Vanity Cabinet	Base	20mm VCS	16mm	-	-	-	Hidden	-	850mm	595mm	-	210mm	184mm	200mm	200mm	25mm
ENS 2																	
	Vanity Cabinet	Base	20mm VCS	16mm	-	-	-	Hidden	-	850mm	595mm	-	210mm	184mm	200mm	200mm	25mm

PMT

FINAL DRAWINGS

CHECKED BY: JL EXT No.
CHECKED TO:
DATE: 24/10/24

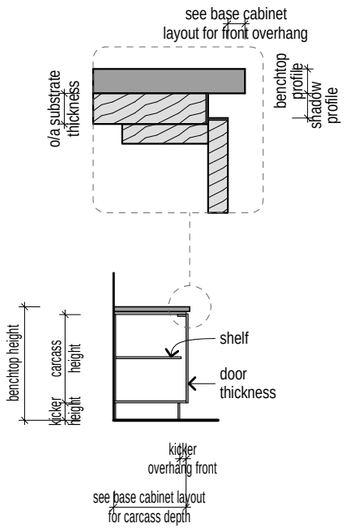

BASE CARCASS SECTION

CBAS001 | CABINET STYLE | BASE

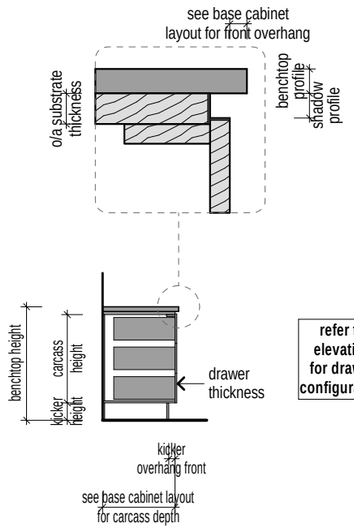

BASE CARCASS SECTION

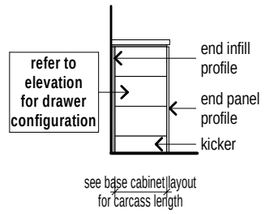

DRAWER CUPBOARD ELEVATION WITH END PANEL & INFILL (reference only)

CBAS002 | CABINET STYLE | BASE DRAWERS

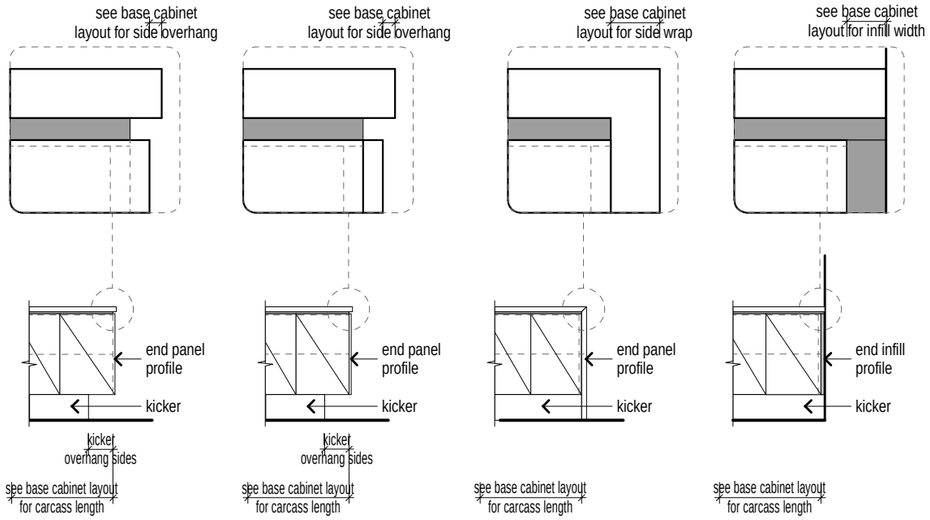

ELEVATION WITH HIDDEN PANEL (reference only) | ELEVATION WITH EXPOSED PANEL (reference only) | ELEVATION WITH END WRAP (reference only) | ELEVATION WITH END INFILL (reference only)

CELP001 | CABINET ELEVATION WITH KICKER

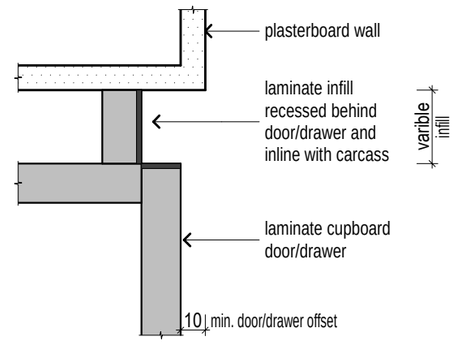

OPTINF001 | END INFILL PROFILE | RECESSED

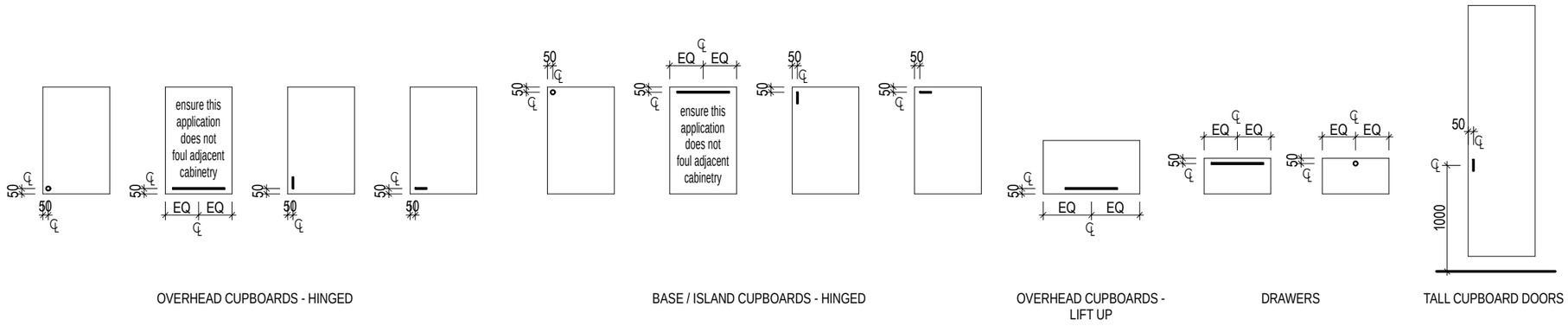

OVERHEAD CUPBOARDS - HINGED | BASE / ISLAND CUPBOARDS - HINGED | OVERHEAD CUPBOARDS - LIFT UP | DRAWERS | TALL CUPBOARD DOORS

OPTHDW001 | TYPICAL CABINETRY HANDLE LOCATIONS

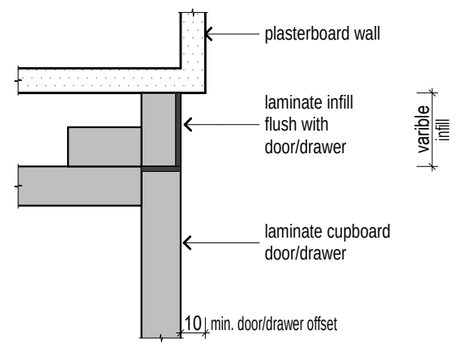

OPTINF002 | END INFILL PROFILE | FLUSH

BY: TQC | ISSUED: 03/11/2024 | REV: 10

© HENLEY ARCH P/L
ALL RIGHTS RESERVED. THIS SET OF DRAWINGS IS COPYRIGHT. APART FROM ANY FAIR DEALING AS PERMITTED UNDER THE COPYRIGHT ACT NO PART MAY BE USED, REPRODUCED OR COPIED BY ANY MEANS OR IN ANY FORM WITHOUT PRIOR PERMISSION OF HENLEY ARCH P/L.
THERE IS NO COPYRIGHT LICENCE, EXPRESS OR IMPLIED, GRANTED WITH RESPECT TO THESE DRAWINGS, ONLY HENLEY ARCH P/L OR ITS SUBSIDIARIES MAY BUILD A HOUSE WHICH REPRODUCES THESE DRAWINGS.

THE SIGNED FINAL DRAWINGS WILL TAKE PRECEDENCE AND WILL DIFFER FROM THE DISPLAY HOME DRAWINGS AND THE SIGNED CONTRACT DRAWINGS GIVEN ON GOING PRODUCTION CHANGES.

WET AREA'S DETAILS

5J	LH
SCALE	1:1, 1:50, 1:5
DATE DRN	21/08/2024
DRAWN BY	PV
JOB NUMBER	704031

Abington 345-D37 **Watego**

CLIENT
QLD READYBUILT
LOT 142, CALLI AVENUE
UPPER COOMERA

* TILE HEIGHTS ARE NOMINAL ONLY. FINISHED TILE HEIGHTS MAY VARY BASED ON SELECTED TILES.
* ALL APPLIANCE DIMENSIONS AND VENTING TO BE CONFIRMED BY CABINET MAKER FROM THE RELEVANT INSTALLATION/ SPECIFICATION MANUAL.
* HEIGHTS TO REF. SPACE ARE FROM SLAB FLOOR LEVEL & DO NOT ALLOW FOR FLOOR COVERINGS.
* FALLS TO FLOOR WASTES WILL BE MIN. 1:80 & MAX. 1:50 (LOCATIONS ARE NOMINAL).
* ALL CUPBOARD DIMENSIONS TO BE CONFIRMED BY SITE MEASURE.
* DIMENSIONS TO SPOUTS & TAPS/MIXERS ARE NOMINAL ONLY AND MAY VARY SLIGHTLY ON SITE.
* DETAILS ARE TO BE USED AS A GUIDE ONLY. ALL CABINETRY CONSTRUCTION MUST MEET THE REQUIREMENTS OF AS 4386.

DENOTES WALL TILES, UNLESS NOTED OTHERWISE. REFER TO INTERNALS

READY BUILT by Plantation Homes
A DIVISION OF HENLEY PROPERTIES (QLD) PTY LTD
3354 PACIFIC HIGHWAY, SPRINGWOOD
Ph: (07) 3290 8888 Fax: (07) 3290 8899

SHELVING								
ROOM NAME	LOCATION	HANGING RAIL STYLE	OVERALL SHELF HEIGHT	OVERALL SHELF DEPTH/S	SHELF HEIGHTS FROM FLOOR	SHELF FASCIA PROFILE	SHELF SUPPORT STYLE	SHELF THICKNESS
BED 2								
	W.I.R	Single Hanging	1650mm	450mm	-	-	Triangular	16mm
BED 3								
	W.I.R	Single Hanging	1650mm	450mm	-	-	Triangular	16mm
BED 4								
	W.I.R	Single Hanging	1650mm	450mm	-	-	-	16mm
GUEST								
	ROBE	Single Hanging	1650mm	450mm	-	-	Triangular	16mm
MASTER SUITE								
	DRESSING	Single Hanging	2000mm	450mm	-	-	Triangular	16mm
	DRESSING 2	Single Hanging	2000mm	450mm	-	-	Triangular	16mm
PASSAGE								
	LIN/BRM	-	1650mm	450/450/450/450mm	450/850/1250/1650mm	-	100x16mm Vert. Panel	16mm
	W.I.L	-	1650mm	450/450/450/450mm	450/850/1250/1650mm	65x16mm	-	16mm

PMT

FINAL DRAWINGS

CHECKED BY: JL EXT No.
CHECKED TO:
DATE: 24/10/24

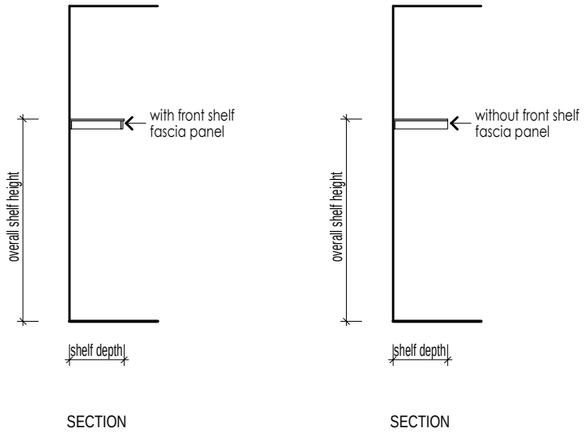

SHLFTYP006 | BROOM SHELF DETAIL

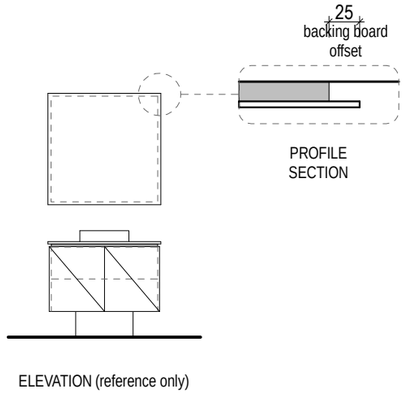

TYPCAB001 | TYPICAL CABINETRY DETAIL | MIRROR

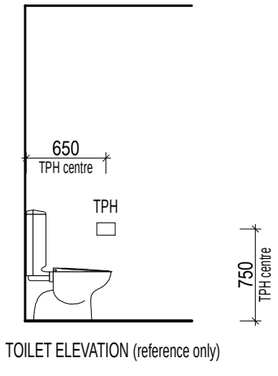

TYPDET001 | TYPICAL FITTING DETAIL | TOILET PAPER HOLDER

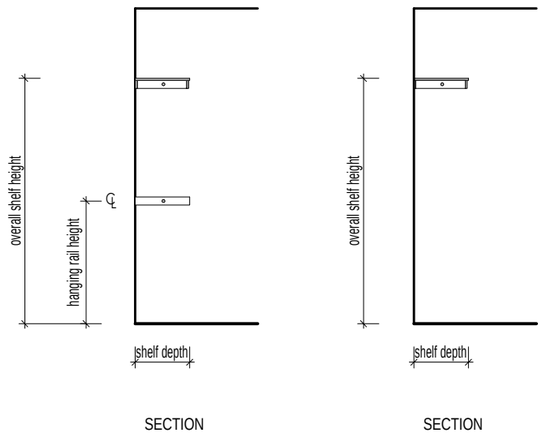

SHLFTYP004 | W.I.R / DRESSING SHELF DETAIL

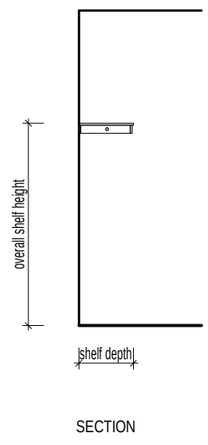

SHLFTYP003 | ROBE SHELF DETAIL

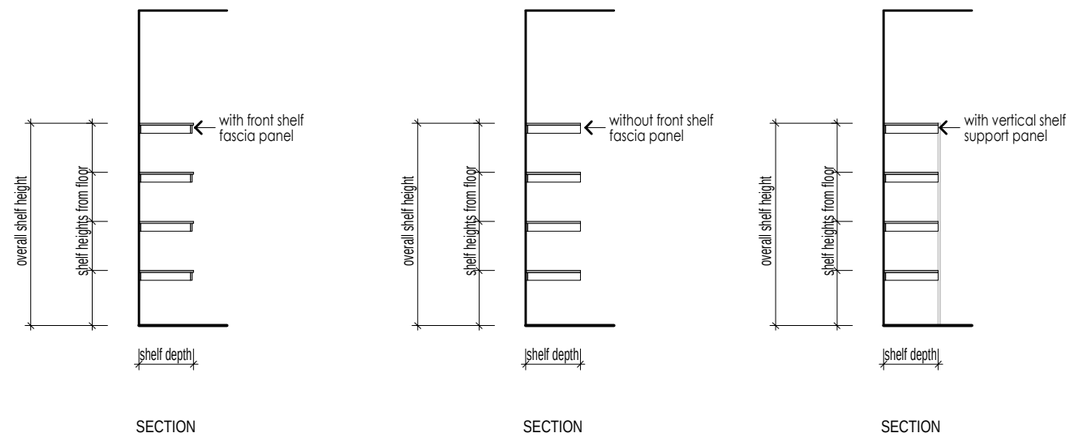

SHLFTYP005 | LINEN SHELF DETAIL

BY: TQC | ISSUED: 03/11/2024 | REV: 10

© HENLEY ARCH P/L
ALL RIGHTS RESERVED. THIS SET OF DRAWINGS IS COPYRIGHT. APART FROM ANY FAIR DEALING AS PERMITTED UNDER THE COPYRIGHT ACT NO PART MAY BE USED, REPRODUCED OR COPIED BY ANY MEANS OR IN ANY FORM WITHOUT PRIOR PERMISSION OF HENLEY ARCH P/L.
THERE IS NO COPYRIGHT LICENCE, EXPRESS OR IMPLIED, GRANTED WITH RESPECT TO THESE DRAWINGS. ONLY HENLEY ARCH P/L OR ITS SUBSIDIARIES MAY BUILD A HOUSE WHICH REPRODUCES THESE DRAWINGS.

THE SIGNED FINAL DRAWINGS WILL TAKE PRECEDENCE AND WILL DIFFER FROM THE DISPLAY HOME DRAWINGS AND THE SIGNED CONTRACT DRAWINGS GIVEN ON GOING PRODUCTION CHANGES.

TYPICAL DETAILS

5K	LH
SCALE	1:1, 1:50
DATE DRN	21/08/2024
DRAWN BY	PV
JOB NUMBER	704031

Abington 345-D37 **Watego**

CLIENT
QLD READYBUILT
LOT 142, CALLI AVENUE
UPPER COOMERA

* TILE HEIGHTS ARE NOMINAL ONLY. FINISHED TILE HEIGHTS MAY VARY BASED ON SELECTED TILES.
* ALL APPLIANCE DIMENSIONS AND VENTING TO BE CONFIRMED BY CABINET MAKER FROM THE RELEVANT INSTALLATION/ SPECIFICATION MANUAL.
* HEIGHTS TO REF. SPACE ARE FROM SLAB FLOOR LEVEL & DO NOT ALLOW FOR FLOOR COVERINGS.
* FALLS TO FLOOR WASTES WILL BE MIN. 1:80 & MAX. 1:50 (LOCATIONS ARE NOMINAL).
* ALL CUPBOARD DIMENSIONS TO BE CONFIRMED BY SITE MEASURE.
* DIMENSIONS TO SPOUTS & TAPS/MIXERS ARE NOMINAL ONLY AND MAY VARY SLIGHTLY ON SITE.
* DETAILS ARE TO BE USED AS A GUIDE ONLY. ALL CABINETRY CONSTRUCTION MUST MEET THE REQUIREMENTS OF AS 4386.

DENOTES WALL TILES, UNLESS NOTED OTHERWISE. REFER TO INTERNALS

READY BUILT by Plantation Homes

A DIVISION OF HENLEY PROPERTIES (QLD) PTY LTD
3354 PACIFIC HIGHWAY, SPRINGWOOD
Ph: (07) 3290 8888 Fax: (07) 3290 8899

NOTES:

- ALL LIVABILITY REQUIREMENTS TO COMPLY WITH THE ABCB STANDARD FOR LIVABLE HOUSING DESIGN
- DIAGRAMS ILLUSTRATE MINIMUM REQUIREMENTS
- FOR BATHS AND SHOWERS; TAPS, NICHES, SOAP HOLDERS AND THE LIKE MAY BE LOCATED WITH-IN THE POSITIONS DESIGNATED FOR WALL REINFORCING

PMT

FINAL DRAWINGS

CHECKED BY: JL EXT No.
CHECKED TO:
DATE: 24/10/24

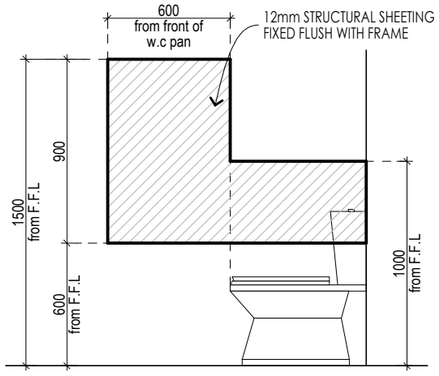

FRA_LR001 | LIVABLE REINFORCING | W.C SHEET REINFORCING

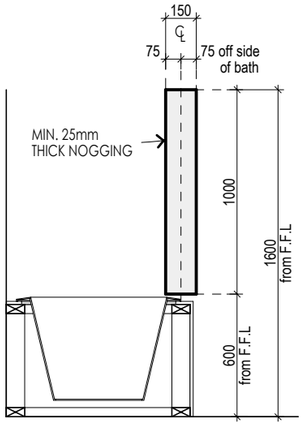

FRA_LR003 | LIVABLE REINFORCING | BATH NOGGING REINFORCING 1

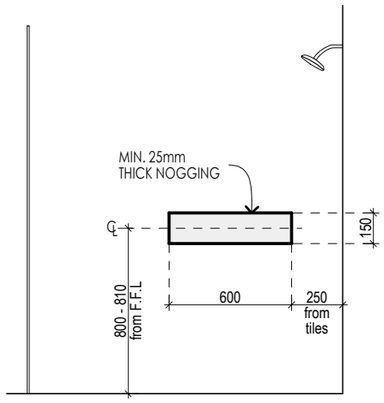

FRA_LR005 | LIVABLE REINFORCING | SHOWER NOGGING REINFORCING 1

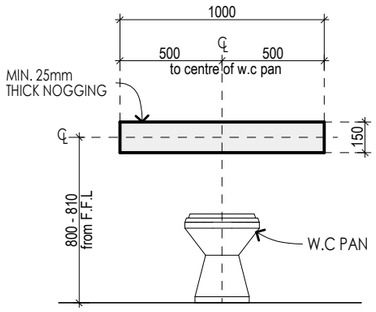

FRA_LR002 | LIVABLE REINFORCING | W.C NOGGING REINFORCING

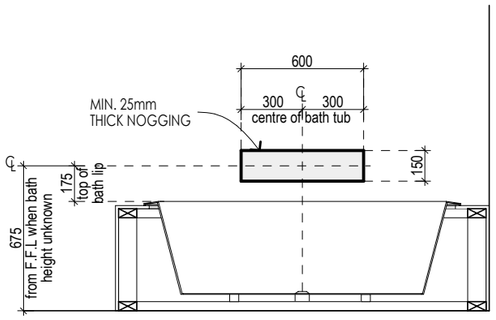

FRA_LR004 | LIVABLE REINFORCING | BATH NOGGING REINFORCING 2

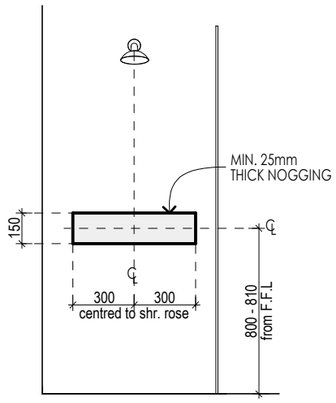

FRA_LR006 | LIVABLE REINFORCING | SHOWER NOGGING REINFORCING 2

BY: TQC | ISSUED: 03/11/2024 | REV: 10

© HENLEY ARCH P/L
ALL RIGHTS RESERVED. THIS SET OF DRAWINGS IS COPYRIGHT. APART FROM ANY FAIR DEALING AS PERMITTED UNDER THE COPYRIGHT ACT NO PART MAY BE USED, REPRODUCED OR COPIED BY ANY MEANS OR IN ANY FORM WITHOUT PRIOR PERMISSION OF HENLEY ARCH P/L.
THERE IS NO COPYRIGHT LICENCE, EXPRESS OR IMPLIED, GRANTED WITH RESPECT TO THESE DRAWINGS. ONLY HENLEY ARCH P/L OR ITS SUBSIDIARIES MAY BUILD A HOUSE WHICH REPRODUCES THESE DRAWINGS.

THE SIGNED FINAL DRAWINGS WILL TAKE PRECEDENCE AND WILL DIFFER FROM THE DISPLAY HOME DRAWINGS AND THE SIGNED CONTRACT DRAWINGS GIVEN ON GOING PRODUCTION CHANGES.

LIVABLE REINFORCING | 5L | LH

* ROOF SECTIONS INDICATED MAY NOT ALIGN EXACTLY WITH SPECIFIC TRUSS DESIGN LAYOUTS.
* THEY ARE SIMPLY TO SHOW HOW THE FEATURE DETAILS ARE TO BE GENERALLY CONSTRUCTED.
* ALL STEEL SHOULD BE INSPECTED BY CONSTRUCTION MANAGER & OR ENGINEER PRIOR TO SITE WELDING.
* THESE DETAILS ARE TO BE READ IN CONJUNCTION WITH ENGINEERS COMPS & DETAILS.
* THE ENGINEERS DOCUMENTATION TAKES PRECEDENCE WHERE THERE IS DISCREPANCY.

SCALE	AS SHOWN
DATE DRN	21/08/2024
DRAWN BY	PV
JOB NUMBER	704031

Abington 345-D37 Watego

CLIENT
QLD READYBUILT
LOT 142, CALLI AVENUE
UPPER COOMERA

* REFER TO ELEVATIONS FOR EXTERNAL FACE FINISH.
* FOR OPENING DIMENSIONS REFER WORKING DRAWINGS.
* ALL TIMBER MEMBERS HAVE BEEN SELECTED FROM AS1684.2 TABLES.
* ALL TIMBERS USED MUST BE SELECTED FOR APPROPRIATE USE AND EXPECTED DURABILITY. REFER TO APPENDIX C OF AS1684.2 REFER TO CUTTING GUIDES.
* ALL NOMINATED TIMBER SIZES ARE NOMINAL AND MAY BE SUBSTITUTED FOR AN EQUIVALENT ALTERNATIVE SIZE IN OTHER SPECIES / STRESS GRADE AS NOMINATED IN AS1684.2
* THE WALL FLASHING MUST EXTEND ACROSS CAVITY AND BE TURNED UP 150mm FIXED TO FRAME.

READY BUILT by Plantation Homes
A DIVISION OF HENLEY PROPERTIES (QLD) PTY LTD
3354 PACIFIC HIGHWAY, SPRINGWOOD
Ph: (07) 3290 8888 Fax: (07) 3290 8899

PMT

FINAL DRAWINGS	
CHECKED BY: JL	EXT No.
CHECKED TO:	
DATE: 24/10/24	

TILE CUT LINES TO SHOWERS (INDICATIVE ONLY) - REFER TO PLANS

NOTE: BELOW DIAGRAM REFLECT APPROX MAX 1:55 AND MIN 1:75 FALLS

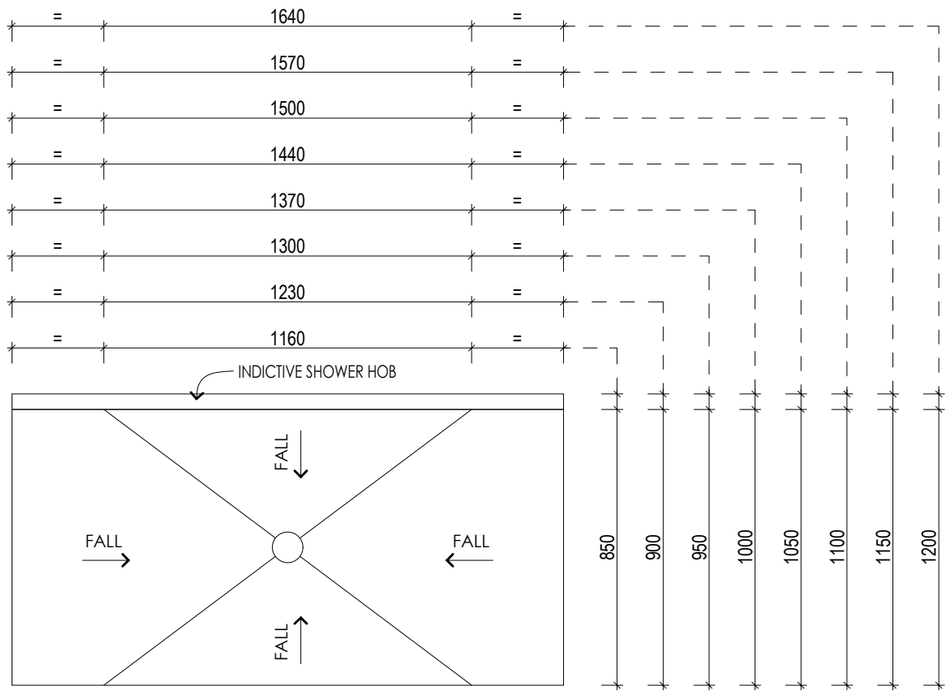

WET_G001 | SHOWER FALLS - HOBBED

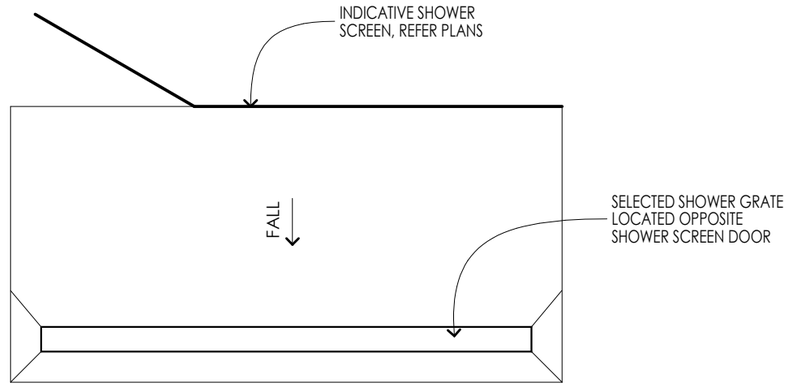

WET_G002 | SHOWER FALLS - HOBLESS

BY: TQC | ISSUED: 03/11/2024 | REV: 10

© HENLEY ARCH P/L
ALL RIGHTS RESERVED. THIS SET OF DRAWINGS IS COPYRIGHT. APART FROM ANY FAIR DEALING AS PERMITTED UNDER THE COPYRIGHT ACT NO PART MAY BE USED, REPRODUCED OR COPIED BY ANY MEANS OR IN ANY FORM WITHOUT PRIOR PERMISSION OF HENLEY ARCH P/L.
THERE IS NO COPYRIGHT LICENCE, EXPRESS OR IMPLIED, GRANTED WITH RESPECT TO THESE DRAWINGS. ONLY HENLEY ARCH P/L OR ITS SUBSIDIARIES MAY BUILD A HOUSE WHICH REPRODUCES THESE DRAWINGS.

THE SIGNED FINAL DRAWINGS WILL TAKE PRECEDENCE AND WILL DIFFER FROM THE DISPLAY HOME DRAWINGS AND THE SIGNED CONTRACT DRAWINGS GIVEN ON GOING PRODUCTION CHANGES.

SHOWER FALLS | **5M** | **LH**

* ROOF SECTIONS INDICATED MAY NOT ALIGN EXACTLY WITH SPECIFIC TRUSS DESIGN LAYOUTS.
* THEY ARE SIMPLY TO SHOW HOW THE FEATURE DETAILS ARE TO BE GENERALLY CONSTRUCTED.
* ALL STEEL SHOULD BE INSPECTED BY CONSTRUCTION MANAGER & OR ENGINEER PRIOR TO SITE WELDING.
* THESE DETAILS ARE TO BE READ IN CONJUNCTION WITH ENGINEERS COMPS & DETAILS.
* THE ENGINEERS DOCUMENTATION TAKES PRECEDENCE WHERE THERE IS DISCREPANCY.

SCALE	AS SHOWN
DATE DRN	21/08/2024
DRAWN BY	PV
JOB NUMBER	704031

Abington 345-D37 — **Watego**

CLIENT
QLD READYBUILT
LOT 142, CALLI AVENUE
UPPER COOMERA

* REFER TO ELEVATIONS FOR EXTERNAL FACE FINISH.
* FOR OPENING DIMENSIONS REFER WORKING DRAWINGS.
* ALL TIMBER MEMBERS HAVE BEEN SELECTED FROM AS1684.2 TABLES.
* ALL TIMBERS USED MUST BE SELECTED FOR APPROPRIATE USE AND EXPECTED DURABILITY. REFER TO APPENDIX C OF AS1684.2 REFER TO CUTTING GUIDES.
* ALL NOMINATED TIMBER SIZES ARE NOMINAL AND MAY BE SUBSTITUTED FOR AN EQUIVALENT ALTERNATIVE SIZE IN OTHER SPECIES / STRESS GRADE AS NOMINATED IN AS1684.2
* THE WALL FLASHING MUST EXTEND ACROSS CAVITY AND BE TURNED UP 150mm FIXED TO FRAME.

READY BUILT by Plantation Homes
A DIVISION OF HENLEY PROPERTIES (QLD) PTY LTD
3354 PACIFIC HIGHWAY, SPRINGWOOD
Ph: (07) 3290 8888 Fax: (07) 3290 8899

PMT

FINAL DRAWINGS	
CHECKED BY: JL	EXT No.
CHECKED TO:	
DATE: 24/10/24	

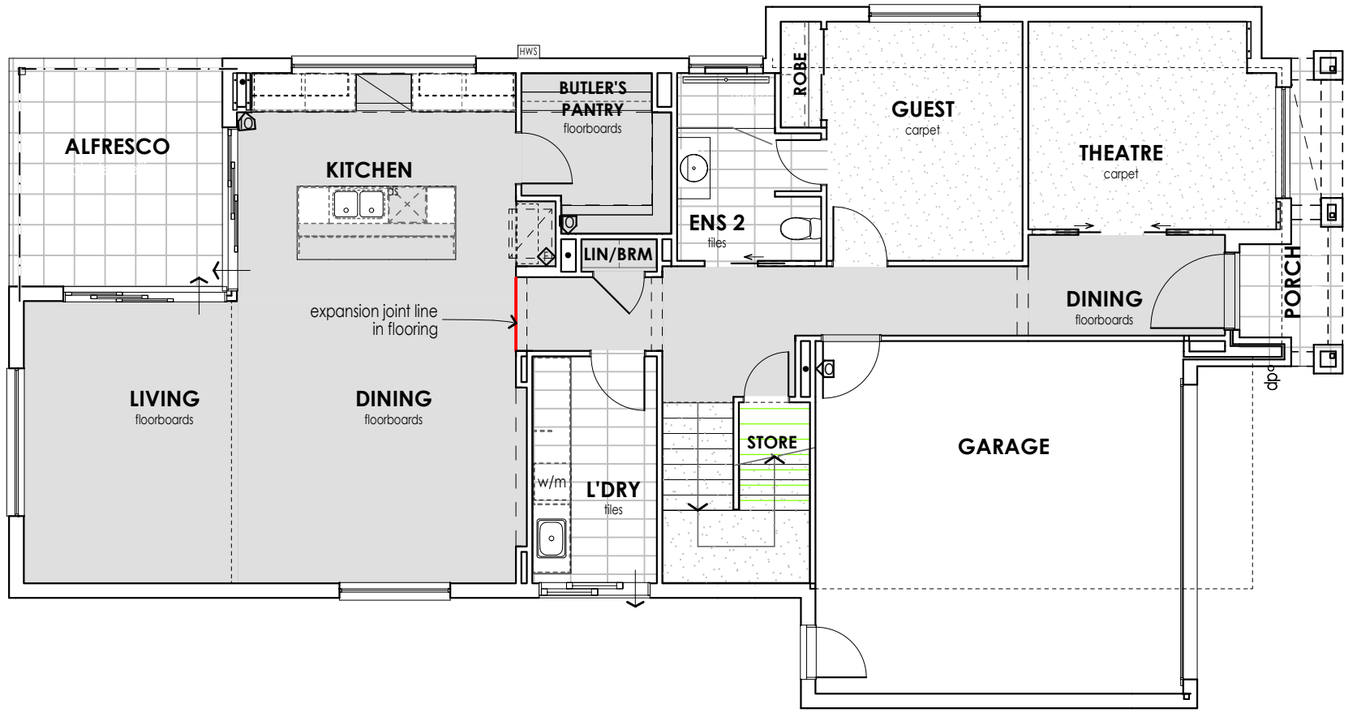

LEGEND

- CARPET
- FLOORBOARDS
- TILES
- VINYL

BY: TQC | ISSUED: 03/11/2024 | REV: 10

© HENLEY ARCH P/L
ALL RIGHTS RESERVED. THIS SET OF DRAWINGS IS COPYRIGHT. APART FROM ANY FAIR DEALING AS PERMITTED UNDER THE COPYRIGHT ACT NO PART MAY BE USED, REPRODUCED OR COPIED BY ANY MEANS OR IN ANY FORM WITHOUT PRIOR PERMISSION OF HENLEY ARCH P/L.
THERE IS NO COPYRIGHT LICENCE, EXPRESS OR IMPLIED, GRANTED WITH RESPECT TO THESE DRAWINGS. ONLY HENLEY ARCH P/L OR ITS SUBSIDIARIES MAY BUILD A HOUSE WHICH REPRODUCES THESE DRAWINGS.

THE SIGNED FINAL DRAWINGS WILL TAKE PRECEDENCE AND WILL DIFFER FROM THE DISPLAY HOME DRAWINGS AND THE SIGNED CONTRACT DRAWINGS GIVEN ON GOING PRODUCTION CHANGES.

FLOOR FINISH'S PLAN G.F. | **9A** | **LH**

SCALE	1:100, 1:1
DATE DRN	21/08/2024
DRAWN BY	PV
JOB NUMBER	704031

Abington 345-D37 **Watego**

CLIENT
QLD READYBUILT
LOT 142, CALLI AVENUE
UPPER COOMERA

* HATCH PATTERNS ARE INDICATIVE ONLY. PLEASE REFER TO COLOUR SELECTION FOR ACTUAL SIZE.
* REFER TO COLOUR SELECTION FOR STAIR FINISHES.

READY BUILT by Plantation Homes
A DIVISION OF HENLEY PROPERTIES (QLD) PTY LTD
3354 PACIFIC HIGHWAY, SPRINGWOOD
Ph: (07) 3290 8888 Fax: (07) 3290 8899

PMT

FINAL DRAWINGS	
CHECKED BY: JL	EXT No.
CHECKED TO:	
DATE: 24/10/24	

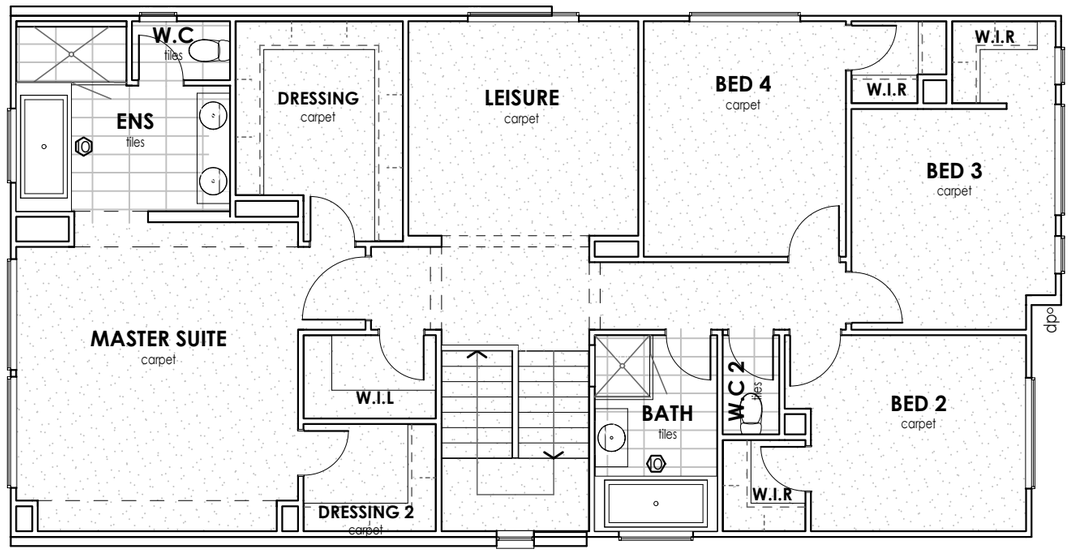

LEGEND

- CARPET
- FLOORBOARDS
- TILES
- VINYL

BY: TQC | ISSUED: 03/11/2024 | REV: 10

© HENLEY ARCH P/L
ALL RIGHTS RESERVED. THIS SET OF DRAWINGS IS COPYRIGHT. APART FROM ANY FAIR DEALING AS PERMITTED UNDER THE COPYRIGHT ACT NO PART MAY BE USED, REPRODUCED OR COPIED BY ANY MEANS OR IN ANY FORM WITHOUT PRIOR PERMISSION OF HENLEY ARCH P/L.
THERE IS NO COPYRIGHT LICENCE, EXPRESS OR IMPLIED, GRANTED WITH RESPECT TO THESE DRAWINGS. ONLY HENLEY ARCH P/L OR ITS SUBSIDIARIES MAY BUILD A HOUSE WHICH REPRODUCES THESE DRAWINGS.

THE SIGNED FINAL DRAWINGS WILL TAKE PRECEDENCE AND WILL DIFFER FROM THE DISPLAY HOME DRAWINGS AND THE SIGNED CONTRACT DRAWINGS GIVEN ON GOING PRODUCTION CHANGES.

FLOOR FINISH'S PLAN F.F.

9B	LH
SCALE	1:100, 1:1
DATE DRN	21/08/2024
DRAWN BY	PV
JOB NUMBER	704031

Abington 345-D37 **Watego**

CLIENT
QLD READYBUILT
LOT 142, CALLI AVENUE
UPPER COOMERA

* HATCH PATTERNS ARE INDICATIVE ONLY. PLEASE REFER TO COLOUR SELECTION FOR ACTUAL SIZE.
* REFER TO COLOUR SELECTION FOR STAIR FINISHES.

READY BUILT by Plantation Homes
A DIVISION OF HENLEY PROPERTIES (QLD) PTY LTD
3354 PACIFIC HIGHWAY, SPRINGWOOD
Ph: (07) 3290 8888 Fax: (07) 3290 8899